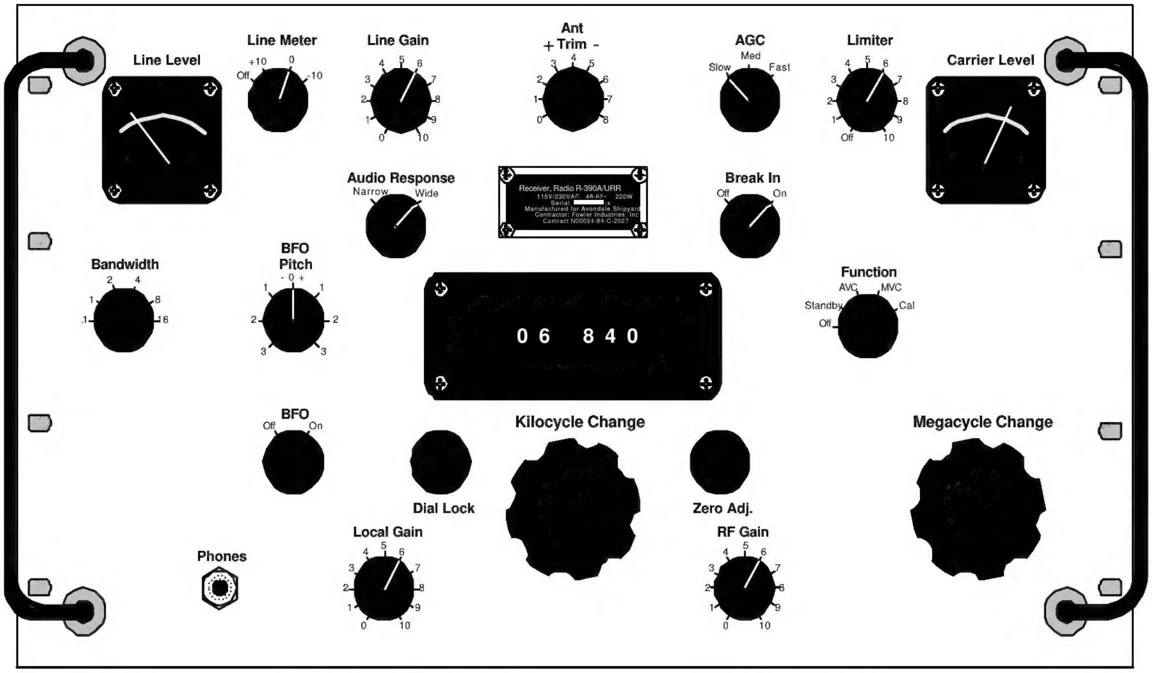

The

21st Century

R-390A/URR

Technical

Reference

A collection of wisdom for enthusiasts

Release 1.0, 2000-May-29

Preface

This project was initiated to fill a gap in the documentation that was electronically available for the R-390A/URR receiver. Many of the issued manuals contained errors or had been superseded by newer manuals. Many of the copies available were of poor quality or incomplete.

Discussions over the past several years on the R-390 mailing list revealed that there was a great deal of additional knowledge about the R-390A/URR that had not been captured in the technical manuals nor anywhere else.

In July 1999, Barry Hauser and I began discussions with several recognized R-390A/URR experts to determine how to best capture the wealth of information that was known about the receiver but had not been gathered together and documented where it was easily referenced. Pete Wokoun, KH6GRT chimed in, volunteering to reproduce as many of the drawings as possible using modern drawing software. Hank Arney graciously provided new color photographs for reference. Joe Foley provided safety information.

We examined the manuals published from 1955 through 1985. The U.S. Navy Technical Manual for the R-390A/URR Radio Receiver (1985-May-15) was chosen as the basis for further work.

The stated goals of this project are to:

1. Re-create the 1985 U.S. Navy Manual in a format that would allow addition of commentaries, footnotes, and additional information.
2. Replace the poor black-and-white photographic images with new color plates
3. Replace the line and schematic drawings with newly drawn ones
4. Add footnotes referencing related documentation, attributing the additional material and corrections to the authors, and explaining unclear passages in the text
5. Update the parts lists with currently available components
6. Add descriptions, methods, and suggestions that were not covered in the original manual

Effective version numbers of sub-documents:

Document	Title	Current Revision	Pages
"This Document"	Front Matter	7	8
CHAPTER 1	GENERAL INFORMATION	7	12
CHAPTER 2	OPERATION	6	17
CHAPTER 3	FUNCTIONAL DESCRIPTION	7	28
CHAPTER 4	SCHEDULED MAINTENANCE	5	7
CHAPTER 5	TROUBLESHOOTING	7	65
CHAPTER 6	CORRECTIVE MAINTENANCE	9	94
CHAPTER 7	PARTS LIST	5	68
CHAPTER 8	INSTALLATION	4	10
		Total:	309

This document would not have been possible without the assistance of many volunteers who assisted with typing, proofreading, drawing, photographing, copying, and researching. We are deeply indebted to the following contributors for their assistance:

Dan "Hank" Arney	Dr. Gerald Johnson	John Patterson, KB4SLV
Joe Foley	Nolan Lee	Walter Wilson
John Harvie	W. Li	

In addition we want to thank Alan Waller, K3TKJ, for his generosity in providing a forum for use by enthusiasts of the R-390A/URR receiver - the R-390 mail reflector on QTH.net.

We want this document to be of the greatest possible use to the public, and believe that the best way to achieve this is to make it free from proprietary claims. If you create or distribute copies of this document, whether gratis or for a fee, you *must* give the recipients all the rights that you have, including the right to freely copy, modify and distribute it.

This document is distributed in the hope that it will be useful, but WITHOUT ANY WARRANTY; without even the implied warranty of MERCHANTABILITY or FITNESS FOR A PARTICULAR PURPOSE.

2000-May-29

Al Tirevold, WAØHQQ	Barry Hauser	Pete Wokoun, KH6GRT
Kennesaw, Georgia, USA	New York, USA	Ewa Beach, Hawaii, USA
tirevold@mindspring.com	barry@hausernet.com	petesr@juno.com

Conventions and Notations used in the preparation of this document:

1. Additional material will be identified by the use of a shaded text block with attribution to the author in a footnote. For example:

> This is text that was added to the original manual[1]

2. Removed material will be identified by the use of a 'strike-through' with attribution to the author in a footnote. For example:

~~This is text that was removed from to the original manual~~[2]

3. Reference material will be identified by the use of a footnote that specifies the document name, number and issue date.

   This is text that needs a reference[3]

[1] This is the reference to the author of the added text.
[2] This is the reference to the author of the deleted text.
[3] This is the name, number and issue date of the reference document.

Joe Foley's Safety Section[4]

I guess I'm the lucky sucker that was appointed author. OK, just so everyone understands that I take NO responsibility for anyone getting hurt playing around with this radio stuff.

YOU'RE ON YOUR OWN!!!! This is a general discussion of safety advice ONLY. Its by NO means the ultimate last word, and it sure WON'T guarantee that you won't get zapped or drop the silly thing on your foot. I won't even get into the magnetic repulsion heavy objects demonstrate when hurtling toward steel toe boots. They always hit that part of the foot that's not covered. Hello, Mr. Murphy!

So, you got this thing home without hurting yourself, you can still stand up straight, that's good. Now you know why radiomen were the strongest men in the military. Proper lifting techniques are important here, lift with your legs, with your back straight, if its too heavy don't hesitate to get help, or the right equipment. Now you know why military radios have BIG handles. Planning helps if you buy one of these at a hamfest, ask anyone who's carried one to the parking lot, you'll need a strong cart of some kind. Yeah, right, if you buy more than one you'll need a strong car! That's why the standard Boatanchor Search and Recovery Vehicle is a 3/4 ton truck!

All right! We've got it to the bench. It should go to the bench first. Before you plug it in take a LONG close look at it. Is the cord grounded, does it have three wires, one being green? Make sure that is securely fastened to the chassis. What's the cord cap look like? That's the end that goes into the wall socket, sorry, some people don't know that's what its called. The screws used to fasten the wires WILL come loose from repeated heating, or handling, check to see that they're tight, also that they're assembled right, white wire/silver screw, black wire/gold screw, green wire/green screw. DON'T ASSUME THE LAST OWNER KNEW WHAT HE WAS DOING. Check everything.

Are the fuses the right ones? Time to check the manual. Oh, yeah, the manual! You are going to read the manual aren't you? The R-390 and early versions of the R-390 A only had one fuse in the back. It was deemed necessary to put two more in because when the radio developed shorts they were spectacular!! Fire ball time! Fuses are good, fuses work!

[4] Version 1, Courtesy of Joe Foley

Now that the power into the radio has been checked do a visual check on the innards. Look for burn marks, hot spots, bad wiring. Do the resistance checks in the manual at every tube socket and resistor. Check the operation of all switches, if any bind or feel loose this is a good time to fix them. The FUNCTION switch has a microswitch mounted on it. If this isn't adjusted right you won't be able to shut down the power to the radio, this isn't good on a radio you're doing a first startup test on. Pay close attention to the Filter Capacitors, they are a popular failure point. They may work fine, explode, or just get very hot, like mine did. You might want to pull all of the modules and continue your visual check, this should be mandatory if its an older model as the Black Beauty capacitors may act just like the above mentioned Filter Capacitors.

Is it power time? That's your decision. If you do it's a good idea to bring it up to full voltage on a variable transformer (variac), slowly, while checking for smoke/heat/sparks. One problem with a variac is that the voltage is dependent on the current passing through it. It should always have a voltmeter attached to it. It should also be connected to a Ground Fault Circuit Interrupter. If the radio continually trips the GFCI check the line filter. Places that normally get hot after warm-up, besides the tubes, are the crystal oven (switchable), the mechanical filters, and the small round can in the back right corner, this is another crystal oven with a thermostat that clicks on and off, there's no switch for it.

How to put it into a rack?? That's not easy if the rack is six feet high and it goes at the top. I'm able to tip my rack onto its back, then I can lower the radio carefully into it, without scratching the paint. The front panel IS NOT to be used to support the whole weight of the radio. The transmission will be mechanically stressed causing it to bind. You're rack needs slides for the radio to slip in properly, at the very least the back needs to be supported, solidly. Make sure your rack is balanced, some racks need weight placed on the bottom if the load is top heavy, especially if its on casters. Tip-overs could get ugly.

The original 1985 Navy Manual cover:

SPAWAR 0913-LP-009-1400

EE125-AB-OMI-010/P6I0 R390A/URR

Technical Manual

Radio Receiver R-390A/URR

Operation, Maintenance and
Installation Instructions
with Parts Lists

This manual supersedes NAVELEX 0967-LP-063-2010
of 15 April 1970 including
Interim Changes T-1 through T-7.

Published by Direction of
Commander, Space and Naval Warfare System Command

15 MAY 1985

Forward

EE125-AB-OMI-010/P6l0 R390A/URR describes and provides instructions and parts list for the installation, operation, and maintenance of Radio Receiver R-390A/URR.

The technical content of this manual reflects the installation of the following changes, performed in the field of the listed equipment.

Radio Receiver R-390A/URR	Field Change
All	No. 1
Shipboard only	No. 2
Shipboard only	No. 3
Shipboard only	No. 4
Shipboard only	No. 5
Shipboard only	No. 6
Shipboard, Supplementary Radio Spaces only	No. 7
Selected Ships only	No. 8

EE125-AB-OMI-010/P610 R390A/URR is comprised of eight chapters:

CHAPTER 1 - GENERAL INFORMATION
CHAPTER 2 - OPERATION
CHAPTER 3 - FUNCTIONAL DESCRIPTION
CHAPTER 4 - SCHEDULED MAINTENANCE
CHAPTER 5 - TROUBLESHOOTING
CHAPTER 6 - CORRECTIVE MAINTENANCE
CHAPTER 7 - PARTS LIST
CHAPTER 8 - INSTALLATION

This Technical Manual is in effect upon receipt and supersedes NAVELEX 0967-LP-063-2010 (formerly NAVSHIPS 0967-063-2010) of 15 April 1970 including Interim Changes T-l through T-7. Extracts from this publication may be made to facilitate preparation of other Department of Defense publications.

1. CHAPTER 1 - GENERAL INFORMATION

TABLE OF CONTENTS

1. CHAPTER 1 - GENERAL INFORMATION 1-1

1.1 PURPOSE. 1-3
1.2 PHYSICAL DESCRIPTION. 1-3
1.3 OPERATIONAL DESCRIPTION. 1-3
1.4 FUNCTIONAL DESCRIPTION. 1-4
1.5 EQUIPMENT CHARACTERISTICS. 1-5
1.6 SAFETY REQUIREMENTS 1-11
1.7 LOGISTICS DATA 1-11

FIGURES

Figure 1-1. Radio Receiver R-390A/URR 1-2
Figure 1-2. System Applications for Teletypewriter and Facsimile Equipment 1-4

Tables

Table 1-1. Equipment Characteristics 1-5
Table 1-2. Input Requirements 1-6
Table 1-3. Equipment Outputs 1-6
Table 1-4. Major Internal Signals 1-7
Table 1-5. Reference Data 1-7
Table 1-6. Equipment Supplied 1-7
Table 1-7. Equipment Required but Not Supplied 1-8
Table 1-8. Field Change Data 1-8
Table 1-9. Production Modifications 1-9
Table 1-10. Materials Required for Scheduled Maintenance 1-11
Table 1-11. Test Equipment Required 1-12

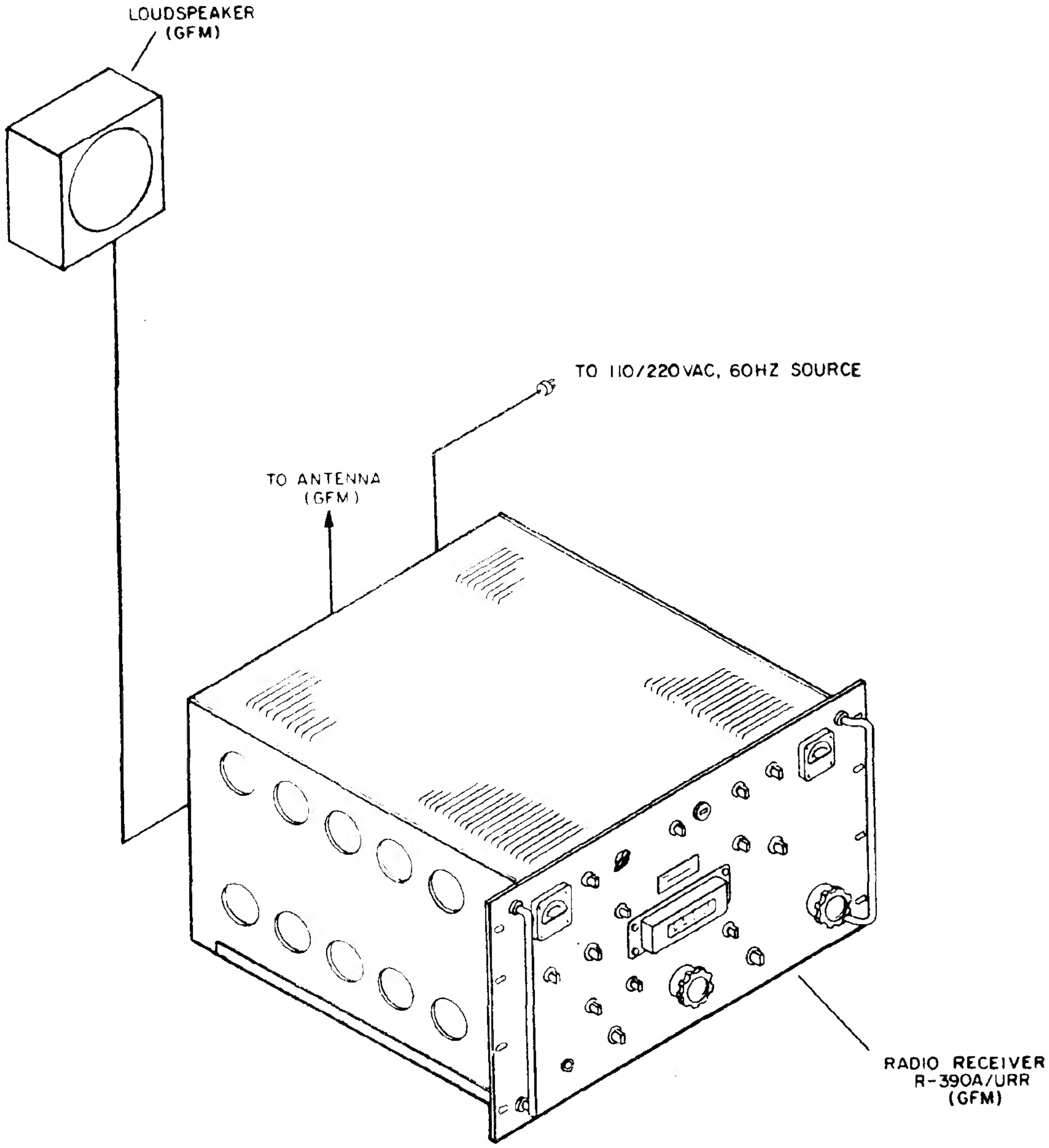

Figure 1-1. Radio Receiver R-390A/URR

Figure 1-1. Radio Receiver R-390A/URR

1.1 PURPOSE.

1.1.1 Radio Receiver R-390A/URR (figure 1-1) is a general purpose receiver for use in both shore based or shipboard installations. It covers the frequency range of 0. 5 to 32 MHz, and is especially adaptable for single-sideband, multi-channel radio-teletypewriter reception with terminal equipment.

1.2 PHYSICAL DESCRIPTION.

1.2.1 The R-390A/URR is an integrally constructed receiver designed for mounting in a standard 19-inch rack or in a table top cabinet. All operating controls, indicators, and a PHONES jack are located on the front panel (figure 2-1). Two handles are provided to aid in removal of the receiver from rack or cabinet. Antenna connections, operating and spare fuses, power cord, IF OUTPUT, OVEN switch, terminal boards, and special tools are mounted on the rear panel (figure 2-2). Cutouts are provided for access to internal controls.

⇒ **Note:**	A modified rear panel for shipboard installation is shown in figure 2-3.

1.3 OPERATIONAL DESCRIPTION.

1.3.1 The R-390A/URR provides reception of continuous-wave (CW), modulated-continuous-wave (MCW), frequency-shift keyed (FSK), and single-sideband (SSB) signals. A double sideband signal, either AM or phase-modulated (PM), occupying up to a total of 12 kHz of spectrum for voice transmission may also be received.

1.3.2 The receiver furnishes audio frequency output power to a local loudspeaker and headset or a balanced line output for connection to a remote amplifier and speaker. An intermediate-frequency output is also provided so that teletype or facsimile signals may be applied to appropriate converters or terminal equipment which further process the signals for application to teletypewriters or facsimile recorders (figure 1-2). A single-sideband converter is used to process SSB signals but is not required for common AM reception. The teletype terminal equipment might include a frequency-shift converter or multiplex equipment.

1.4 FUNCTIONAL DESCRIPTION.

1.4.1 Radio Receiver R-390A/URR is a superheterodyne type with multiple frequency conversion covering a frequency range of 0.5 to 32 MHz. Double conversion is used when operating from 8.0 to 32 MHz, and triple conversion when operating from 0.5 to 8.0 MHz. Linear tuning provides constant frequency spread throughout the entire range. Tuning is accomplished by positioning powdered-iron cores in the RF and IF coils, at a rate controlled by a mechanical arrangement of gears, shafts, and cams. The operating frequency is read from a counter-type indicator. A built-in crystal-controlled oscillator provides frequency calibration. An output is taken from between the third and fourth i-f stages to provide a 455 kHz output for Sideband Converter CV-591/URR. The output of the LOCAL AUDIO provides either 500 mw power to a 600 ohm load or 1 mw for a headset, while the output of the LINE AUDIO provides a 10 mw output Into a 600 ohm balanced line. A BREAK-IN relay is also provided to disconnect the antenna when an associated transmitter is keyed.

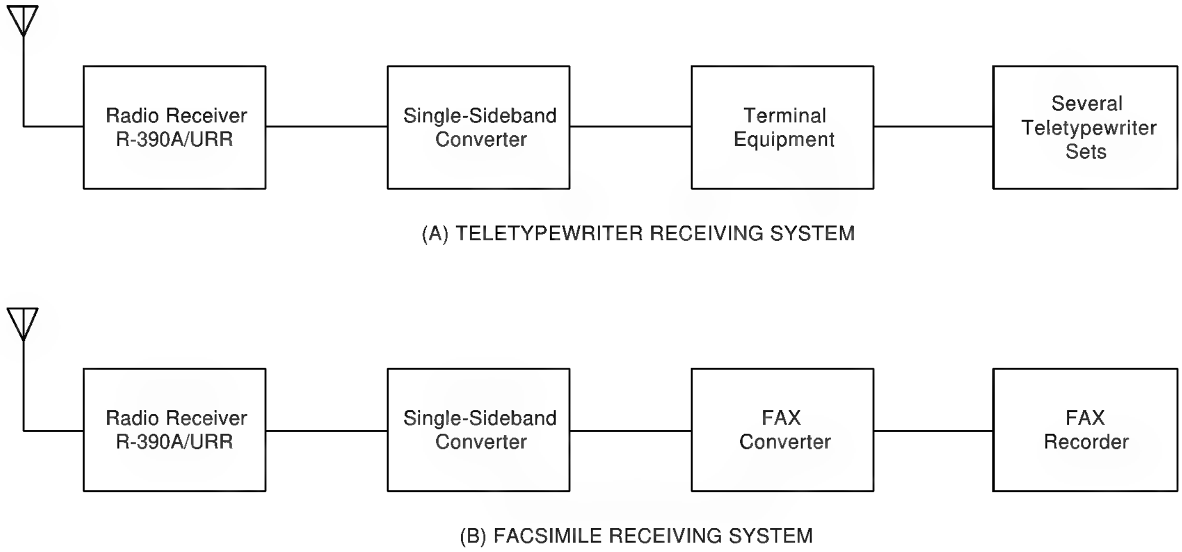

Figure 1-2. System Applications for Teletypewriter and Facsimile Equipment[1]

[1] Drawing courtesy Al Tirevold, WAØHQQ

1.5 EQUIPMENT CHARACTERISTICS.

1.5.1 Information relating to equipment capabilities, input requirements, output signals, internal signals, equipment supplied and required, reference data, and field change is contained in tables 1-1 through 1-8.

Table 1-1. Equipment Characteristics

CAPABILITY	PARAMETERS
Frequency range	0.5 to 32 MHz
Types of signals received	CW, MCW, FSK, SSB, and AM
Frequency indication	Read from digital Indicator
Method of calibration	Built-In crystal-controlled oscillator
Calibration accuracy	Less Than 300 Hz
Calibration points	Every 100 kHz
Sensitivity (signal plus noise to noise ratio)	
AM sensitivity	5 uv at 10dB rise
CW sensitivity	1 uv at 10dB rise
Ambient temperature range:	
Operating	-40 to +75°C
Storage	-62 to +75°C
Ambient humidity	0 to 95%
VFO stability vs. temperature:	+40 to +60°C, not to exceed 500 Hz, change must be positive +60 to +75°C, not to exceed 500 Hz, change must be negative +20 to +40°C, not to exceed 750 Hz, -40 to -20°C, not to exceed 400 Hz.
Overall stability	-40 to +65°C, not to exceed 300 Hz.

Table 1-2. Input Requirements

INPUT	REQUIREMENTS
Power source	115 or 230 volts ac ±10%, 48 to 62 Hz
Power input	250 watts total; 140 watts with OVENS switch turned to OFF.
Antenna Inputs:	
Unbalanced	Whip or single-wire antennas.
Balanced	125 ohm terminating impedance: matches 50 to 200 ohm balanced, or unbalanced transmission line by use of adapters.

Table 1-3. Equipment Outputs

OUTPUT	REQUIREMENTS
Local audio	1 mw into a headset. 500 mw into a 600 ohm load.
Line audio	10 mw into a 600 ohm balanced—line for remote stations.
IF output	455 kHz at 180-220 ma, 50 ohm impedance match.
Diode load	Audio output voltage for test purpose.

Table 1-4. Major Internal Signals

SIGNAL	CHARACTERISTICS
Calibration signal	100 kHz markers and harmonics.
First crystal oscillator	17 MHz
Resultant sum frequency from first mixer	17.5 to 25 MHz (first variable IF)
Second crystal oscillator	11 to 34 MHz
Resultant difference frequency from second mixer.	3 to 2 MHz (second variable IF)
Variable frequency oscillator	3.455 to 2.455 kHz
Resultant frequency from third mixer.	455 kHz (fixed and final IF)
Beat frequency oscillator	452 to 458 kHz
Resultant beat frequency from audio detector	0 to 3000 Hz, adjustable

Table 1-5. Reference Data

NAME	NOMENCLATURE
Technical Manual	NAVSHIPS
Maintenance Standards Book	NAVSHIPS 93053.42A

Table 1-6. Equipment Supplied

ITEM	HEIGHT (in.)	DEPTH (in.)	WIDTH (in.)	UNIT WEIGHT (lb.)
Radio Receiver R390A/URR	10-15/32	16-19/32	19	75

Table 1-7. Equipment Required but Not Supplied

ITEM	NOMENCLATURE
Doublet antenna or whip antenna or single-wire antenna	
Headset	
Sideband Converter	CV-591A/URR

Table 1-8. Field Change Data

CHANGE	AUTHORIZATION	APPLICABILITY	IDENTIFICATION
No. 1[2]	EIB 526 EIB 551A	All	Lead connected between pins 2 and 7 of tube socket XV603.
No. 2[3]	EIB 542	Shipboard only	Two soldered jumper leads on TB-101.
No. 3	EIB 702	Shipboard only	"AN" type connectors for terminating audio and AC power cables on the rear panel.
No. 4[4]	EIB 655 EIB 661 EIB 876 EIB 664	Shipboard only	Diode load test jack located on front panel.
No. 5		Shipboard only	Shorting plug connected to J104 on rear panel.
No. 6[5]	EIB 702	Shipboard only	Rectifier tubes V801 and V802 have been removed.
No. 7[6]	EIMB See EIB-911	Shipboard installations in Supplementary Radio Spaces only.	Decals located on VFO assembly and RF amplifier chassis "Modified by FC7".
No. 8	EIMB	Selected ships only	Elapsed time indicator mounted on front panel.

[2] Field Change 1 is further described in NAVSEA 0976-LP-063-2060.
[3] Field Change 2 is further described in NAVSEA 0967-LP-063-2070.
[4] Field Changes 4 and 5 are further described in NAVSHIPS 0967-063-2140.
[5] Field Change 6 is further described in NAVSHIPS 0967-063-2110.
[6] Field Change 7 is further described in NAVSEA 0967-LP-063-2120.

1.5.2 Production Changes. During production of the receiver, several changes were made in the equipment (table 1-9). Each of these changes is shown on the receiver by means of a modification number stamped on the affected subchassis. A MOD number higher than 1 indicates that all earlier modifications have also been performed. Some receivers may have a MOD number stamped on a part rather than a subchassis. This indicates that a modification has been made to the part and it is not a subchassis modification.

Table 1-9. Production Modifications

Modifications (b. below)	Subchassis or part bearing MOD No	MOD numbers	
		Order No. 14214-Phila-51, 375- Phila-54, and 08719-Phila- 55	Order No. 363-Phila-54
Pin 7, V201, connected to ground instead of to pin 2.	RF	2	1
C275 changed from 5,000 pf to 3,300 pf.	RF	2	1
C612, 68 pf, added in parallel with R601.	AF	1	1
C257, 47 pf, added in parallel with C227.	RF	4	2
Series network of C256, 0.1 uf, and R235, 47 ohms, inserted between terminal 1 of HR202 and ground.	RF	3	2
C232 - 1 and C232 - 2 changed from 2,400 pf to 1,500 pf.	Z201-1, Z201-2	1	3
Suppressor E213 added between contact 9 of S204 front and junction of E208, R233, and C255.	RF	5	2
C507 and C516 changed from selected value to 51 pf.	IF		1

Modifications (b. below)	Subchassis or part bearing MOD No	MOD numbers	
		Order No. 14214-Phila-51, 375- Phila-54, and 08719-Phila- 55	Order No. 363-Phila-54
C508 through C510 and C513 through C515 changed from selected values to 82 pf.	IF		1
Trimmer capacitors C564 through C571 added (fig. 3-6 and para. c. below)	IF	2	1
R504 changed from 1, 000 to 560 ohms.	IF	2	1
IF transformers T502 through T503 stagger-tuned at factory (a. below)	IF	2	1
B+ fuses (d. below).			

a. This was also done to receivers on Order No. 08719-Phila-55 with serial numbers 600 and higher.

b. Modifications to receivers bearing Order No. 14-Phila-56. All of the modifications listed in table 1-9 were made to receivers bearing Order No. 14-Phila-56; however, MOD numbers were stamped only on tuned-circuit assemblies Z201-1 and Z201-2. For identification, the order number has been stamped on each subchassis.

c. Alternate-type filters in some receivers bearing Order No. 14-Phila-56. Some receivers bearing Order No. 14-Phila-56 have 8- and 16-kHz mechanical filters, FL504 and FL505 (fig. 6-16), that require a decreased amount of tuning capacitance across their inputs and outputs. In these receivers, capacitors C515 (82 pf) and C516 (51 pf) are not connected to the output terminals of the filters; instead, both capacitor leads are attached to ground lugs on the filter mounting screws. In addition, capacitors C507 (51 pf) and C508 (8 pf) are not connected to the input terminals of the filters; instead, both capacitor leads are attached to ground lugs on a shield underneath the intermediate frequency (IF) chassis. These capacitors are available when filters requiring the full amount of tuning capacitance are installed in the receiver. Capacitors C564, C565, C570, and C571 remain in the circuits.

d. B+ Fuses. Receivers bearing Order No. 14-Phila-56, serial numbers 2683 and above, and Order No. 14385-Phila-85 have two additional fuses for B+ circuit protection. Fuse F102 is located in the B+ line between pin 5 of plug P111 and pin 5 of plug P119. Fuse F103 is located in the B+ line leading from pin 2 of plug P119.

1.6 SAFETY REQUIREMENTS

⇒WARNING:

The voltage used in this receiver can be dangerous to human life.

To prevent shock hazard to personnel touching outside metal parts of the receiver, connect GND terminal 16 on the rear panel to the same ground as that of the power source.

Do not depend on the front panel screws or the antenna transmission line to ground the chassis.

1.7 LOGISTICS DATA

1.7.1 The estimated time required to perform scheduled maintenance is 1-1/2 man hours per quarter. Material required in performing scheduled maintenance is listed in table 1-10, and test equipment required to perform all maintenance tasks is listed in table 1-11.

Table 1-10. Materials Required for Scheduled Maintenance

ITEM	PURPOSE
Soft-bristled brush	Remove dust from receiver
Lint-free cloth	Wipe receiver surfaces
Cleaning solvent, Navy type 140-F	Remove grease and smudge from receiver surfaces
Pressurized dry air	Remove lighter sediment from hard to reach areas

Table 1-11. Test Equipment Required

CATEGORY	RECOMMENDED	ALTERNATE	PARAMETERS
HF Signal Generator	AN/URM-25D[7]	AN/URM-25( )[8]	400 kHz to 32 MHz, 0.1 uv to 0.1 v, 400 Hz modulation
RF Multimeter	ME-30B/U		455 kHz
Electronic Multimeter	AN/USM-116( )	ME-6D/U[9]	2.5 to 345 vac, 0 to 300 vdc
Multimeter	AN/PSM-4( )	CSV-260	0 to inf (∞) ohms
Audio Oscillator	AN/URM- 127	TS-382/U	425 to 3500 Hz, 100 mv
Oscilloscope	AN/USM-117( )	AN/USM-105	0.2 to 2 vdc/cm
Frequency Counter	AN/USM-207( )	CAQI-524D	425 Hz to 32 MHz, 0.1 v rms
Tube Socket Adapter	AN/URM-119	MX-125B/U	

[7] The Instruction Book for the AN/URM-25D RF Signal Generator is NAVSHIPS 0967-187-5010 (1953-Dec-31) formerly NAVSHIPS 92134(A) and Change #7 - NAVSHIPS 0967-187-5016 (1966-Dec-07)
[8] The Instruction Book for the AN/URM-25F RF Signal Generator Set is NAVSHIPS 92495 (1955-May-12)
[9] The Instruction Book for the ME-6D/U Electronic Multimeter is NAVSHIPS 92423 (T.O. 33A1-12-102-1) (1955-Jan-18)

2. CHAPTER 2 - Operation

TABLE OF CONTENTS

2. CHAPTER 2 - OPERATION 2-1

2.1 INTRODUCTION. 2-2
2.2 CONTROLS AND INDICATORS. 2-2
2.3 OPERATING INSTRUCTIONS AND CONTROL SETTINGS 2-9
2.3.1 Pre-operational Settings. 2-9
2.3.2 Operating Procedures. 2-9
2.3.2.1 Calibration 2-9
2.3.2.2 AM Reception 2-10
2.3.2.3 MCW or CW Reception. 2-11
2.3.2.4 FSK Reception. 2-12
2.3.2.5 SSB Reception. 2-12
2.3.2.6 AM Operation in Jamming Environment. 2-13
2.3.2.7 CW or MCW Operation in Jamming Environment. 2-13
2.3.2.8 Emergency Turn-Off Procedure 2-14
2.3.2.9 Operators Turn-Off Procedure. 2-14
2.4 OPERATOR'S MAINTENANCE 2-14
2.4.1 Visual Inspection. 2-14
2.4.2 Operational Checks. 2-15

FIGURES

Figure 2-1 - Front Panel 2-3
Figure 2-2 - Rear Panel 2-4
Figure 2-3 - Rear Panel for Shipboard Use 2-5

Tables

Table 2-1 - Operating Controls, Indicators and Connectors 2-6
Table 2-2 - Operational Checklist 2-15
Table 2-3 - List of Overload Protection Devices 2-17

2.1 INTRODUCTION.

2.1.1 Radio Receiver R-390A/URR is a general purpose receiver that is designed to receive continuous-wave (CW), tone modulated CW (MCW), amplitude-modulated (AM), frequency-shift keyed (FSK), and, in conjunction with a converter, single-sideband (SSB) transmissions in the 0.5 to 32 MHz range. The receiver furnishes AF output power to a local loudspeaker and headset or a balanced line in all modes.

2.1.2 A single-sideband converter may be used with the receiver for the reception of single-sideband (SSB) signals. This permits reception of SSB signals with a 3.5 kHz bandwidth. A double sideband, either AM or phase-modulated (PM), occupying up to a total bandwidth of 3.5 kHz also can be received. This mode is used primarily for the reception of multi-channel radio-teletypewriter transmissions.

2.1.3 Operator maintenance consists of those checks and tests that can be done by equipment controls or by visual observation. Technician maintenance consists of alignment and troubleshooting procedures usually requiring the use of test equipment. Refer to figure 2-1 for location and identification of operating controls and indicators.

2.2 CONTROLS AND INDICATORS.

2.2.1 All controls, indicators, and connectors required for normal use are located on the front panel (figure 2-1).

2.2.2 Fuses and other connectors are located on the back of the receiver (figures 2-2 and 2-3).

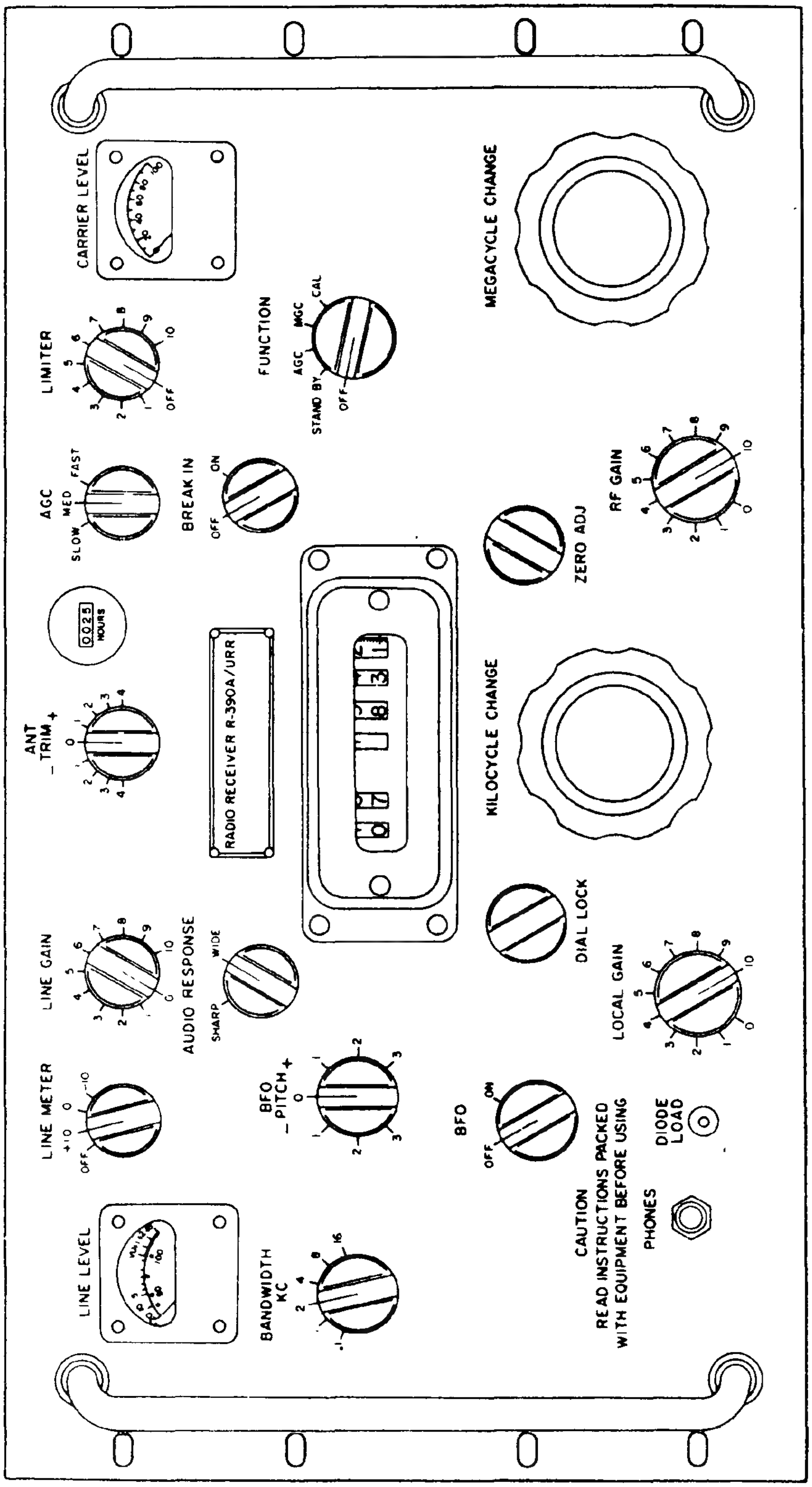

Figure 2-1. Front Panel

Figure 2-1 - Front Panel

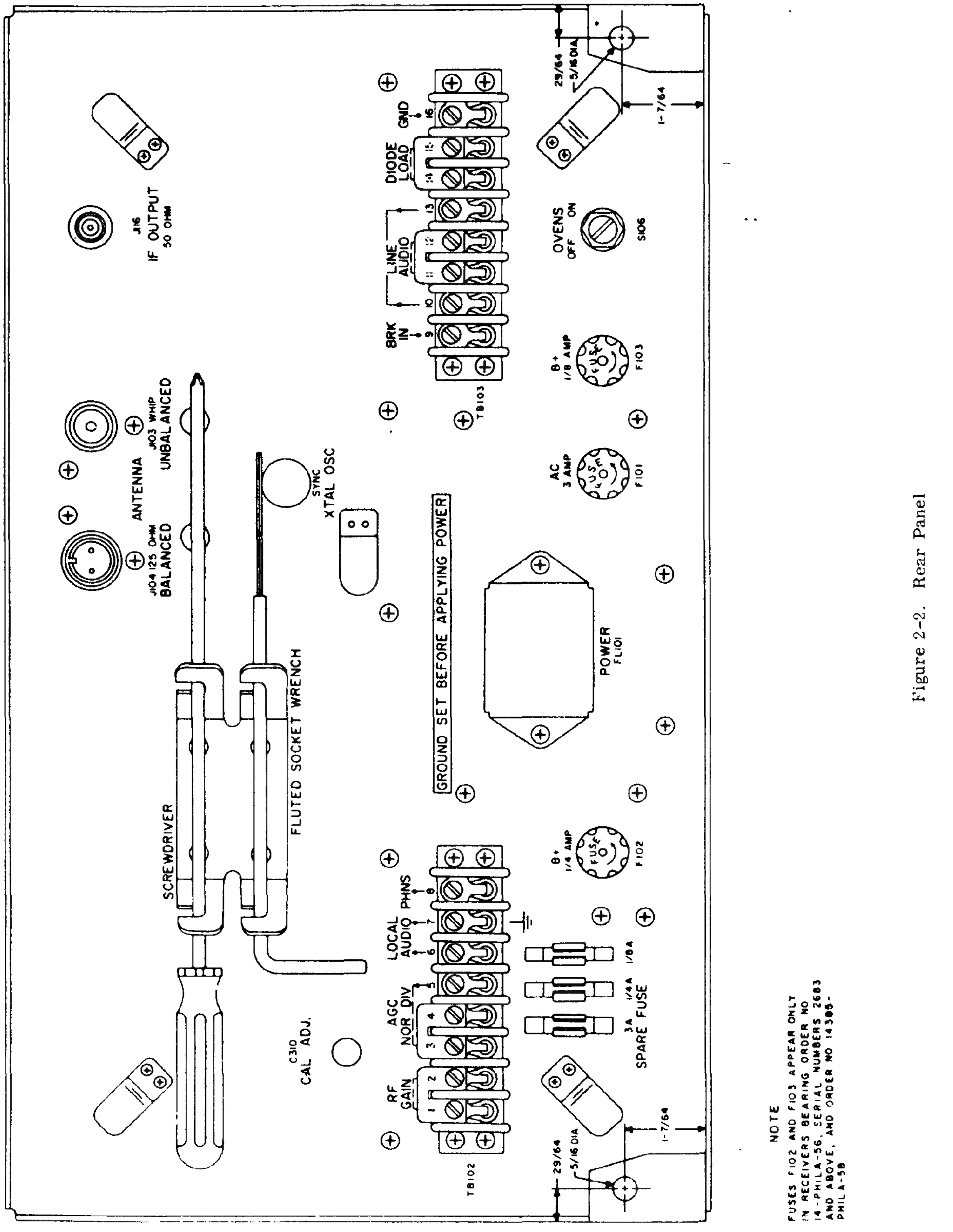

Figure 2-2 - Rear Panel

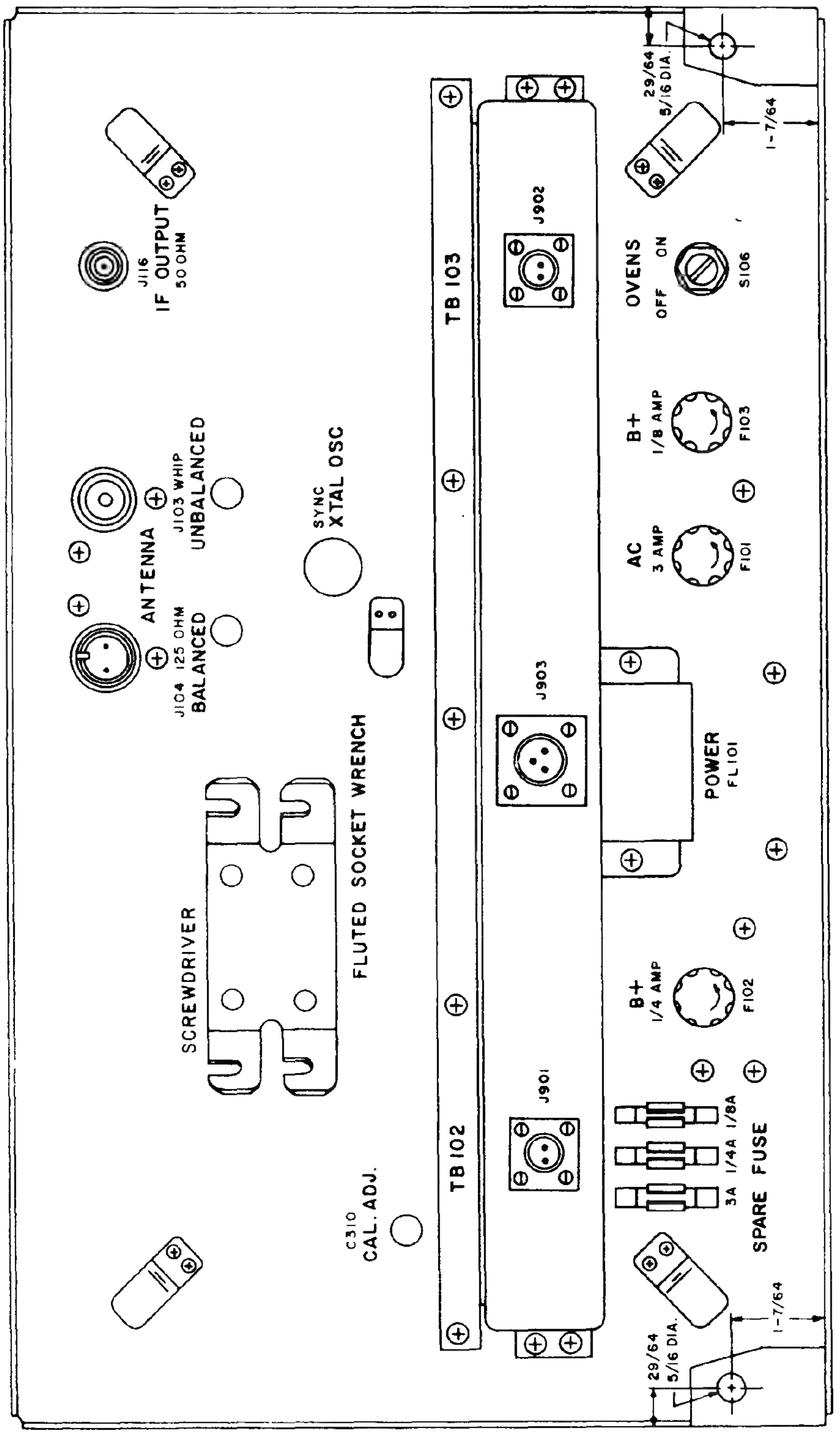

Figure 2-3. Rear Panel for Shipboard Use

Figure 2-3 - Rear Panel for Shipboard Use

Table 2-1 - Operating Controls, Indicators and Connectors

CONTROL/INDICATOR/ CONNECTOR	REFERENCE DESIGNATION	FUNCTION	
LINE LEVEL meter	M101	Indicates level of balanced-line audio output.	
LINE METER switch	S105	LINE METER Switch has four positions:	
		Position	Effect
		OFF	Disconnects meter from balanced-line output
		+10	Adds 10 VU to LINE LEVEL meter VU indication
		0	Reads LINE LEVEL meter directly
		-10	Subtracts 10 VU from LINE LEVEL meter indication
FUNCTION switch	S102	FUNCTION switch has five positions:	
		Position	Effect
		OFF	No power applied
		STAND BY	Receiver inoperative, filament voltage applied to tubes.
		AGC	Receiver operative, with gain controlled automatically
		MGC	Receiver operative, with gain controlled by RF GAIN or by an external control
		CAL	Receiver and internal 100 kHz oscillator operative for calibration checks
BREAK IN switch	S103	Permits break-in operation with proper connections on rear terminal board	
LINE GAIN control	R104	Controls level of signal applied to balanced-line audio output terminals	

CONTROL/INDICATOR/ CONNECTOR	REFERENCE DESIGNATION	FUNCTION
AUDIO RESPONSE switch	S104	Position — Effect Sharp — 800 Hz tone is loudest; used for CW Wide — Most voice frequencies are heard
BANDWIDTH KC switch	S501	Changes the band pass centered on the carrier frequency to the width selected
BFO PITCH control	L508	Used to adjust pitch of audio output tone when receiving CW
BFO switch	SiOl	Turns on beat frequency oscillator by applying plate and screen voltages
PHONES jack	J102	Used to connect headset to audio output
DIODE LOAD jack	J904	Used to measure detector voltage
LOCAL GAIN control	R105	Controls the audio output to phones or local speaker
DIAL LOCK control		Mechanical lock on KILOCYCLE CHANGE control
KILOCYCLE CHANGE control	Gear train	Tunes various RF circuits to any frequency within a 1 megacycle band; changes reading of last three digits of frequency indicator
Frequency Indicator	Counter	Indicates frequency receiver is tuned to
ZERO ADJ Control	Mechanical clutch	Used to calibrate the frequency indicator to a known frequency

CONTROL/INDICATOR/ CONNECTOR	REFERENCE DESIGNATION	FUNCTION
RF GAIN control	R103	Manual control of amplification of receiver signal
MEGACYCLE CHANGE control	Gear train	Selects any frequency band from 1 to 32 MHz in 1 MHz steps; changes first two digits of frequency indicator
CARRIER LEVEL meter	M102	Indication of 0 dB with RF GAIN control at 10 corresponds to an input signal of approximately 2 microvolts
LIMITER switch and control	R120	Controls static and noise interference
AGC switch	S107	Controls rate of change in gain when signal strength changes
ANT TRIM control	C225	Used for peaking signal
BALANCED ANTENNA connector	J104 (rear panel)	For doublet antenna
UNBALANCED ANTENNA connector	J103 (rear panel)	For long wire or whip antenna
OVENS switch	S106 (rear panel)	Set to ON position when receiver is operated under low—temperature or variable-temperature conditions.
		Set to OFF position when receiver is operated in a temperature regulated building, or when maximum frequency stability is not required.

2.3 OPERATING INSTRUCTIONS AND CONTROL SETTINGS

2.3.1 Pre-operational Settings.

1. Turn the FUNCTION switch to STANDBY and allow receiver to warm up for 20 minutes.
2. Turn DIAL LOCK fully counterclockwise.

2.3.2 Operating Procedures.

2.3.2.1 Calibration

To maintain maximum tuning accuracy, calibrate the frequency indicator at the 100 kHz point nearest the desired frequency. Re-calibrate whenever the MEGACYCLE CHANGE control is turned.

a)	Turn the BANDWIDTH switch to 1 position.
b)	Turn the BFO switch to ON.
c)	Turn the BFO PITCH control to 0.
d)	Turn the FUNCTION switch to CAL.
e)	Turn the MEGACYCLE CHANGE control to the desired band.
f)	Turn the KILOCYCLE CHANGE control to the 100 kHz point nearest the desired frequency.
g)	Turn the ZERO ADJ knob fully clockwise.
h)	Turn RF GAIN control to 10.
i)	Turn LOCAL GAIN control to desired level.
j)	Adjust the KILOCYCLE CHANGE control for a peak indication on the CARRIER LEVEL meter.
k)	Adjust the ANT TRIM knob for a peak indication on the CARRIER LEVEL meter.
l)	Turn the ZERO ADJ fully counterclockwise. The frequency dial is now calibrated.
m)	The BFO PITCH control should produce a zero beat at 0. If not adjusted for zero beat, loosen the knob set screw, set knob to 0 without turning shaft and retighten the knob set screw.

2.3.2.2 AM Reception

1. Set controls as follows:

a)	MEGACYCLE CHANGE control:	To desired band.
b)	KILOCYCLE CHANGE control:	To desired frequency after calibrating at nearest 100 kHz point.
c)	DIAL LOCK knob:	Fully counterclockwise
d)	AGC control:	MED
e)	LINE METER switch:	0
f)	RF GAIN control:	10
g)	LOCAL GAIN control:	Adjust as required
h)	LINE GAIN control:	LINE LEVEL meter indication at the VU mark.
i)	BANDWIDTH switch:	8

2. Adjust the KILOCYCLE CHANGE control and ANT TRIM control for a peak Indication on the CARRIER LEVEL meter.

3. If there is a rapid fade on the signal, turn the AGC control to FAST.

4. To reduce adjacent station Interference turn the BANDWIDTH switch to 4, or 2 if necessary.

5. If the receiver is to be disabled during periods of transmission, turn the BREAK-IN switch to ON. Usually, shore stations only are wired for BREAK-IN operation.

6. Adjust the LIMITER control as needed to reduce excessive noise.

2.3.2.3 MCW or CW Reception.

1. Set controls as follows:

a)	DIAL LOCK knob:	Fully counterclockwise.
b)	MEGACYCLE CHANGE control:	To desired band.
c)	KILOCYCLE CHANGE control:	To desired frequency after calibrating at nearest 100 kHz point.
d)	FUNCTION switch:	MGC
e)	AGC control:	SLOW
f)	LIMITER control:	OFF
g)	BANDWIDTH switch:	2
h)	RF GAIN control:	10
i)	LOCAL GAIN control:	Adjust as desired
j)	AUDIO RESPONSE switch:	SHARP for CW, WIDE for MCW
k)	BFO switch:	ON for CW, OFF for MCW
l)	BFO PITCH control:	0

2. Tune the KILOCYCLE CHANGE control for a zero beat of the desired frequency.

3. Adjust the BFO PITCH control for the desired tone (CW only).

4. To reduce adjacent channel interference turn the BANDWIDTH switch to 1, or .1 if necessary.

5. GAIN control setting to prevent blocking as necessary.

2.3.2.4 FSK Reception.

1. Set controls as in paragraph 2.3.2.3 for CW reception, after which make the following changes:

a)	BANDWIDTH switch:	Turn to 2, except for filter type (teletype converter) equipment where audio frequencies of 2125 and 2975 Hz are used, turn to 4

2. Adjust the KILOCYCLE CHANGE control slightly until mark and space signals have the same signal strength.

3. Adjust the BFO PITCH control for the best teletypewriter copy.

4. Set the LINE METER switch to 0 and turn the LINE GAIN control to 10. The LINE LEVEL meter needle should deflect fully to the right.

5. Adjust the LIMITER control for a LINE LEVEL meter indication at the VU mark on meter dial.

2.3.2.5 SSB Reception.

1. Set controls as in paragraph 2. 3. 2. 3 for CW reception, after which make the following additions or changes:

a)	BANDWIDTH switch:	Set at 4.
b)	BFO PITCH control:	Set at -2 or +2 for USB or LSB respectively.
c)	KILOCYCLE CHANGE control:	Tune to carrier frequency.
d)	AUDIO RESPONSE switch:	WIDE

2. Adjust the BFO PITCH control slightly for the most intelligible reception. It may also be necessary to adjust the KILOCYCLE CHANGE control slightly for the best reception.

3. If the receiver is used with a single-sideband converter then the procedure given in the converter manual should be used for setting the receiver controls.

2.3.2.6 AM Operation in Jamming Environment.

1. Turn the KILOCYCLE CHANGE control very slowly through several dial markings on either side of the desired signal. Some separation of the desired signal from the jamming signal may be achieved.

2. Turn the BANDWIDTH switch to 4 or 2 and again slowly tune the KILOCYCLE CHANGE control.

3. Adjust the ANT TRIM control to the point where the desired signal is heard with the least amount of interference.

4. Adjust the LIMITER control if the noise is severe.

5. When the jamming signal is weak, turn the FUNCTION switch to MGC and adjust the RF GAIN control as required. The interfering signal may be reduced enough to permit the desired signal to come through.

6. If these steps do not provide a readable signal, request a change of frequency and call sign.

7. Request the use of CW operation, if permissible.

8. If possible, change the direction, length, and height of the antenna. This may reduce the jamming effectiveness so that some degree of satisfactory reception is obtained.

9. If the jamming prevents communication, report this fact to your immediate superior. - Keep the receiver tuned to the desired signal; continue to operate.

2.3.2.7 CW or MCW Operation in Jamming Environment.

1. Turn the KILOCYCLE CHANGE control very slowly through a few dial markings on either side of the desired signal. Some separation of the desired signal from the jamming signal may be achieved.

2. Turn the BANDWIDTH switch to 1 or . 1 and turn the AUDIO RESPONSE switch to SHARP, and again slowly tune the KILOCYCLE CHANGE control.

3. Adjust the BFO PITCH control (CW only); it may be possible to separate the tone of the desired signal from the jamming signal to provide readability.

4. Perform steps 3 through 6, 8, and 9 of procedure 2.3.2.6 for AM/MCW operation.

2.3.2.8 Emergency Turn-Off Procedure.

1. During an emergency such as fire, smoke, etc., main power should be secured at an external switch.

2.3.2.9 Operators Turn-Off Procedure.

1. When the receiver is not to be used but is to be maintained in a state of readiness, turn the FUNCTION switch to STANDBY.

2. To shut the receiver off, turn the FUNCTION switch to OFF.

2.4 OPERATOR'S MAINTENANCE

2.4.1 Visual Inspection.

Visual inspections are operator's preventive maintenance that require no special tools or test equipment. This inspection should be made before the equipment is operated and on a regular scheduled basis.

Check all items listed below.

⇒ WARNING:	***The voltage used in this receiver can be dangerous to human life.*** Do not check any item with the power on.

1. Check that all cables, headset cords, and antenna cables are properly connected.

2. Check that no cables or cords are cut, frayed, or broken.

3. Check that the antenna cable is not grounded or open.

4. Check all fuses, replace any that are broken or burned-out (burned-out fuses are usually an indication of other troubles). Refer to table 2-2 for fuse location.

5. After all inspections have been made, check that the primary power cable is attached, and all external power switches are on.

2.4.2 Operational Checks.

The operational checks will assist the operator to determine that the R-390A/URR is functioning normally. Place the receiver in AM reception (paragraph 2.3.2.2). After the equipment has had time to warm up, perform the steps shown in table 2-2 in the order given.

⇒ Caution:	If at any step in the operational check, normal indication does not occur, turn the FUNCTION switch to OFF. Make a note at which step the malfunction appeared, and the observed indications. Notify the technical maintenance personnel of the malfunction and the indications received.

Table 2-2 - Operational Checklist

	ACTION	NORMAL INDICATION
1.	Set FUNCTION switch to AGC.	Dial lamps lighted. Rushing noise or signal heard in headset.
2.	Turn KILOCYCLE CHANGE control to WWV or other standard.	Desired station is heard.
3.	Adjust ANT TRIM control for maximum indication.	Maximum deflection of the CARRIER LEVEL meter should be obtained.
4.	Turn the LOCAL GAIN control from minimum to maximum,	Volume at the loudspeaker or headset will increase.
5.	Turn the LINE GAIN control from minimum to maximum.	Output level to 600 ohm line and LINE LEVEL meter indication will increase.
6.	Turn HF GAIN control from minimum to maximum,	Audio output and CARRIER LEVEL meter indication will increase.
7.	Turn FUNCTION switch to AGC.	With no signal being received, noise level should increase slightly and CARRIER LEVEL meter should not indicate.
8.	Tune KILOCYCLE CHANGE control to several different signals with FUNCTION switch at AGC.	Output volume nearly constant.

	ACTION	NORMAL INDICATION
9.	Set up calibration procedure as in paragraph 2.3.2.1. Check for normal receiver gain at upper, center, and lower portion of each band, selected by MEGACYCLE CHANGE control.	CARRIER LEVEL meter should indicate not less than 40dB with minor adjustment of KILOCYCLE CHANGE control.
10.	Turn LIMITER control to the right.	Noise level is reduced in amplitude; audio signal is distorted.
11.	Turn LINE METER switch to 0, and adjust LINE GAIN control.	LINE LEVEL reading at 0 dB (VU mark).
12.	Set LINE METER switch to -10.	LINE LEVEL meter reads completely to the right.
13.	Set LINE METER switch to +10.	LINE LEVEL meter reads -10. -.
14.	Set LINE METER switch to OFF.	No reading on LINE LEVEL meter.
15.	Turn BFO switch ON.	
16.	Turn KILOCYCLE CHANGE control.	A whistle-like tone is heard as each station is tuned in.
17.	Turn BFO PITCH control.	The pitch of the tone changes.
18.	Turn BANDWIDTH KC switch to each position from 16 to .1.	Selectivity becomes sharper and noise decreases. Only low frequency audio tones are heard in the 1 position.
19.	Turn FUNCTION switch to STANDBY.	No noise or signal is heard, dial lamps remain lighted.
20.	Turn FUNCTION switch to OFF.	Dial lamps go out.

Table 2-3 - List of Overload Protection Devices

<table>
<tr><td rowspan="3">FUSE SYMBOL</td><td colspan="4">LINE VOLTAGE</td><td rowspan="3">FUNCTION</td></tr>
<tr><td colspan="2">115 Volts</td><td colspan="2">230 Volts</td></tr>
<tr><td>OVENS Switch ON</td><td>OVENS Switch OFF</td><td>OVENS Switch ON</td><td>OVENS Switch OFF</td></tr>
<tr><td>F-101</td><td>3 amp</td><td>2 amp</td><td>1-1/2 amp</td><td>1 amp</td><td>Line Fuse</td></tr>
<tr><td>F-102</td><td colspan="2">1/4 amp, 250 v</td><td colspan="2">1/4 amp, 250 v</td><td>B+ Line</td></tr>
<tr><td>F-103</td><td colspan="2">1/8 amp, 250 V</td><td colspan="2">1/8 amp, 250 v</td><td>B+ Line</td></tr>
<tr><td colspan="6">All Fuses are located on the rear panel of the receiver (figure 2-2).</td></tr>
</table>

3. CHAPTER 3 - Functional Description

TABLE OF CONTENTS

3. CHAPTER 3 - FUNCTIONAL DESCRIPTION 3-1

3.1 OVER-ALL FUNCTIONAL DESCRIPTION........ 3-3
3.2 DETAILED CIRCUIT ANALYSIS. (SEE FIGURE 5-12). 3-5
3.2.1 Introduction........ 3-5
3.2.2 Antenna Circuit........ 3-5
3.2.3 Antenna Circuit - Shipboard Use (Field Change 5)........ 3-6
3.2.4 Calibration Oscillator. 3-6
3.2.5 RF Amplifier........ 3-6
3.2.6 First Mixer and First Crystal Oscillator, ... 3-7
3.2.7 Second Mixer and Second Crystal Oscillator........ 3-7
3.2.8 Third Mixer and VFO. 3-8
3.2.9 First IF Amplifier. 3-9
3.2.10 Second, Third, and Fourth IF Amplifiers. 3-13
3.2.11 Detector and Limiter. 3-18
3.2.12 Beat-Frequency Oscillator. 3-18
3.2.13 IF Cathode Follower........ 3-19
3.2.14 Automatic Gain Control (AGC) Circuit. 3-19
3.2.15 CARRIER LEVEL Meter Circuit. 3-20
3.2.16 First AF Amplifier and AF Cathode Follower........ 3-20
3.2.17 Local Audio Channel........ 3-21
3.2.18 Line Audio Channel........ 3-21
3.2.19 Power Supply Circuits, (See figure 5-11). 3-22
3.3 MECHANICAL TUNING SYSTEM 3-23
3.3.1 Functional Description. (See figure 3-9). 3-23
3.3.2 Detailed Mechanical Analysis. (See figure 3-10)........ 3-25
3.3.2.1 MEGACYCLE CHANGE Control. 3-26
3.3.2.2 KILOCYCLE CHANGE Control. 3-27
3.3.2.3 ZERO ADJ Control. 3-28

FIGURES

Figure 3-1 Overall Block Diagram.. 3-3
Figure 3-2 Antenna Input Connections Modified by Field Change 5 for Shipboard Installations............ 3-8
Figure 3-3 Second Crystal Oscillator V401, Crystal and Plate Circuit Switching Schematic Diagram.. 3-12
Figure 3-4 Crystal Filter, Simplified Schematic Diagram.. 3-13
Figure 3-5 First IF Amplifier V501, Simplified Schematic Diagram.. 3-15
Figure 3-6 Modified Mechanical IF Filters... 3-16
Figure 3-7 Typical Mechanical Filters 3-17
Figure 3-8 Typical Oscilloscope Presentations of Limiter Operation 3-19
Figure 3-9 Tuning System, Mechanical Block Diagram.. 3-23
Figure 3-10 Tuning System, Simplified Mechanical Diagram... 3-25

3.1 OVER-ALL FUNCTIONAL DESCRIPTION.

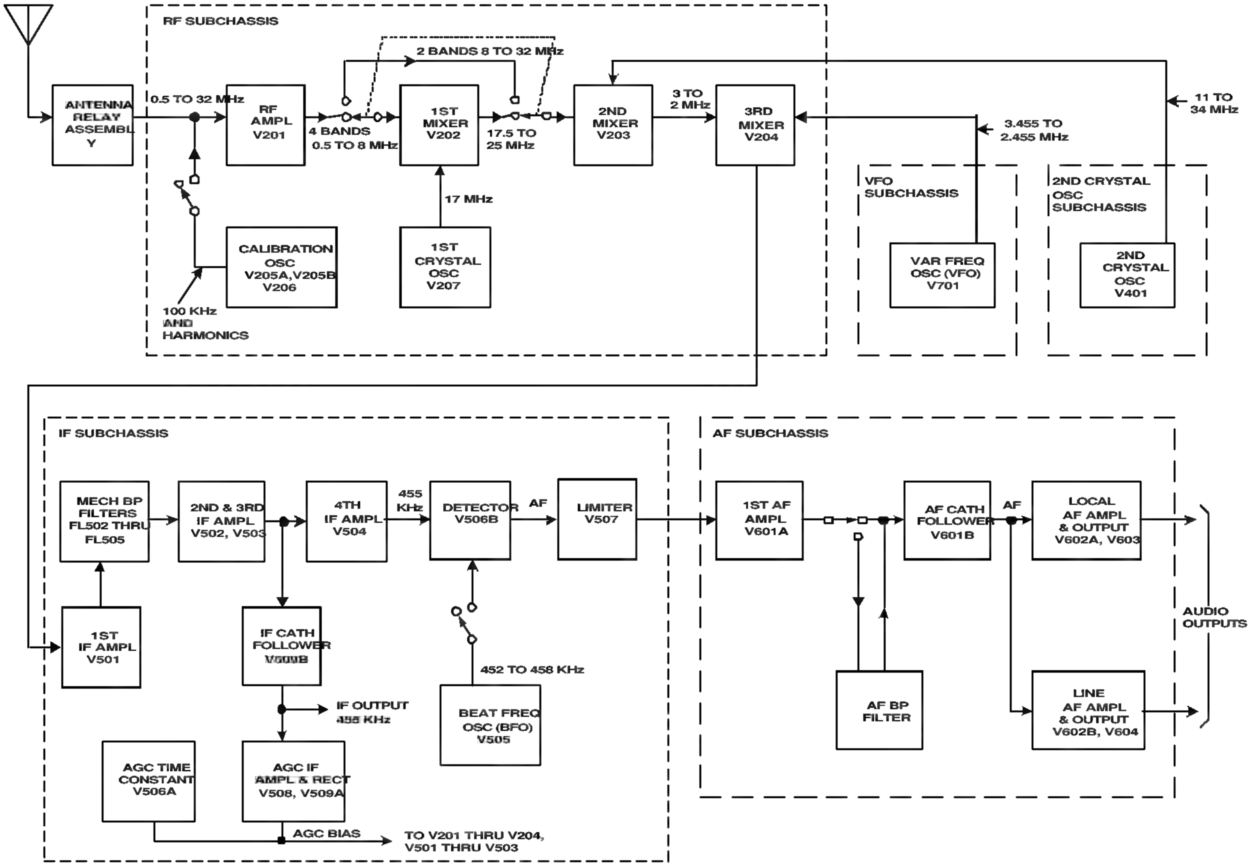

Figure 3-1 Overall Block Diagram[1]

3.1.1 Radio frequency signals in the range of 0. 5 to 32 MHz are applied by way of an appropriate antenna to the antenna relay assembly of the R-390A/URR receiver (figure 3-1).

The antenna relay assembly permits isolation of antenna and receiver whenever an associated transmitter is operated, or when calibration signals are applied to the rf amplifier in lieu of received signals.

The calibration oscillator generates a 100 kHz signal and harmonics for convenient built-in dial calibration checking.

[1] Courtesy of Pete Wokoun, KH6GRT

3.1.2 After RF amplification, the lower input frequencies, 0.5 to 8 MHz, are applied to the first mixer whereas the upper frequencies, 8 to 32 MHz, bypass this stage.

The lower frequencies are heterodyned with a fixed 17 MHz frequency which is generated by the first crystal oscillator. The sum frequency is selected, so that the resultant output of the first mixer ranges from 17.5 to 25 MHz.

The second mixer receives either this range of frequencies from the first mixer when tuning the lower bands, or the directly applied 8 to 32 MHz signals from the RF amplifier on the higher bands.

3.1.3 The second crystal oscillator generates fixed frequencies in 1 MHz steps from 11 to 34 MHz.

These steps are selected so that the difference input to the third mixer varies between 3 and 2 MHz.

The variable frequency oscillator that also feeds this mixer is tuned from 3.455 to 2.455 MHz in step with the input signal so that the output of the third mixer is always 455 kHz. This frequency is applied to a four-stage IF amplifier.

3.1.4 The first IF stage has a crystal filter in its input circuit and mechanical filters in its output circuit that provide for bandwidth selection in six steps.

The output of the third IF stage is applied to a cathode follower as well as to the fourth IF stage.

The output of the cathode follower is used to develop an AGC bias, and can also be used externally by sideband converter equipment.

The AGC bias is processed by an amplifier stage and a rectifier, and a time constant stage provides control of the AGC response time.

3.1.5 After amplification in the fourth IF stage, the 455 kHz signal is detected to produce audio frequencies.

A beat-frequency oscillator can be employed to receive keyed CW signals.

A limiter stage is also provided and the amount of limiting can be adjusted or eliminated entirely.

The audio amplifiers permit the introduction of an audio bandpass filter if desired, and provide separate outputs to local phones or speaker and to remote (line) speakers.

3.2 DETAILED CIRCUIT ANALYSIS. (See figure 5-12).

3.2.1 Introduction

Radio Receiver R-390A/URR consists of a main frame and six sub chassis.

These are the RF sub-chassis, variable—frequency oscillator (VFO) sub-chassis, crystal-oscillator sub-chassis, IF sub-chassis, AF sub chassis, and the power- supply sub-chassis.

3.2.2 Antenna Circuit.

The antenna circuit matches antennas of various characteristics to RF amplifier V201.

The BALANCED ANTENNA input (using connector J104) has characteristic impedance of 125 ohms. Two-wire antenna systems, such as doublets with either 50-ohm twisted pair or coaxial transmission lines or with 50 to 200-ohm twin-lead transmissions lines, may be used without serious mismatch. Long wire antennas may also be used if one side of J104 is connected to ground.

The UNBALANCED ANTENNA connector, J103, Is used for whip long-wire, random-length, and single-wire antennas.

Normally, a balanced antenna is connected via relay K101A contacts and switches S201 and S202 to the input coil of one of six RF transformers, T201 through T206, depending upon the frequency being tuned.

Similarly, an unbalanced antenna is connected via relay K101B contacts and switch S205 to one of six capacitors within the RF transformers.

When relays K10LA and B are energized, all antenna input terminals are disconnected from the RF transformers and are grounded. Relays K101A and K101B are energized only when an associated transmitter is connected to the break-in circuit and is keyed, or when the FUNCTION switch is in the STANDBY or CAL positions.

With the BREAK-IN switch in the ON position and the associated transmitter keyed, a ground is applied to pin 9 of TB103 to energize relay K601. This break-in relay provides a ground connection for CR102 which energizes K101A and B. Note that CR102 is also grounded when K601 is de-energized and the FUNCTION switch is in the STANDBY or CAL position.

3.2.3 Antenna Circuit - Shipboard Use (Field Change 5)

The connections of the antenna circuit are changed for shipboard use by field change 5 (figure 3-2).

In this circuit arrangement, an unbalanced antenna connection is made to J103 but because of the reversal of connectors, P205 and P206, the antenna is connected to S202 and pin 1 of the selected RF transformer primary.

Pin 2 of the same coil is grounded via S201 and a shorting plug on J104.

3.2.4 Calibration Oscillator.

The calibration oscillator circuit is always connected to grid 1 of the RF amplifier, but the three stages, (V205A, V206 and V205B) are only activated when the FUNCTION switch is placed in the CAL position. This causes B+ to be applied to the three calibration oscillator stages and disconnects the antenna input as described in paragraph 3.2.2.

Calibration oscillator V205A is a crystal controlled oscillator which generates a 200 kHz signal that is used to synchronize 100 kHz multivibrator V206. The multivibrator acts as a harmonic generator, and its output is coupled to the RF amplifier by way of cathode follower V205B. The 100 kHz harmonics permit calibration checking over the entire range of the receiver.

3.2.5 RF Amplifier.

RF amplifier V201 amplifies input signals and prevents antenna radiation of the various signals generated by oscillators in the receiver.

RF GAIN control R103 adjusts the cathode bias, and, consequently, the gain of V201 and the first and second IF amplifiers.

The RF GAIN jumper on rear panel terminal board TB102 can be removed and a remote gain control can be connected if desired.

RF coils Z201-1 through Z206-1 and Z201-2 through Z206-2 are switched in step with antenna transformer switching.

3.2.6 First Mixer and First Crystal Oscillator,

Input frequencies from 0.5 to 8 MHz are applied to first mixer V202 whereas 8 to 32 MHz signals are routed around this stage.

First crystal oscillator V207 generates a fixed 17 MHz signal for cathode injection to the first mixer. T207 includes the plate tank circuit and a coupling coil. By switching its screen voltage on or off, this oscillator is enabled while tuning from 0.5 to 8 MHz, and is disabled while tuning from 8 to 32 MHz. Note that switches S207, S208 front, and S208 rear operate in step.

Z213 in the plate circuit of the first mixer is tuned to the sum of the two input signals; that is, from 17.5 to 25 MHz as the receiver is tuned from 0.5 to 8 MHz.

3.2.7 Second Mixer and Second Crystal Oscillator.

The signals applied to grid 6 of second mixer V203 range from 17.5 to 25 MHz when the receiver is tuned from 0.5 to 8 MHz, and then range from 8 to 32 MHz when the receiver is tuned from 8 to 32 MHz.

The second crystal oscillator generates one of 32 fixed frequencies for application to the cathode of the second mixer.

The oscillator frequency is selected by means of the MEGACYCLE CHANGE control which drives two 32-contact switches (figure 3-3).

Switch S401 selects one of 15 crystals, and switch S402 selects an appropriate plate-circuit tuning capacitor.

The plate circuit of V401 is tuned to the fundamental, second, or third harmonic of the selected crystal to provide the desired frequency, as indicated in figure 3-3.

The frequency advances in 1 MHz steps from 20 to 27 MHz as the receiver is tuned from 0. 5 to 8 MHz, and then proceeds from 11 to 34 MHz as the receiver is tuned from 8 to 32 MHz.

The plate-circuit coil is a part of T401 (figure 5-11) which also provides coupling to the second mixer. The mixer's plate tank, Z216, is tuned by the KILOCYCLE CHANGE control to the difference frequency which descends from 2.5 to 2. 0 MHz as the receiver is tuned from 0.5 to 1 MHz, and then descends from 3.0 to 2.0 MHz as the receiver is tuned from 1 to 32 MHz.

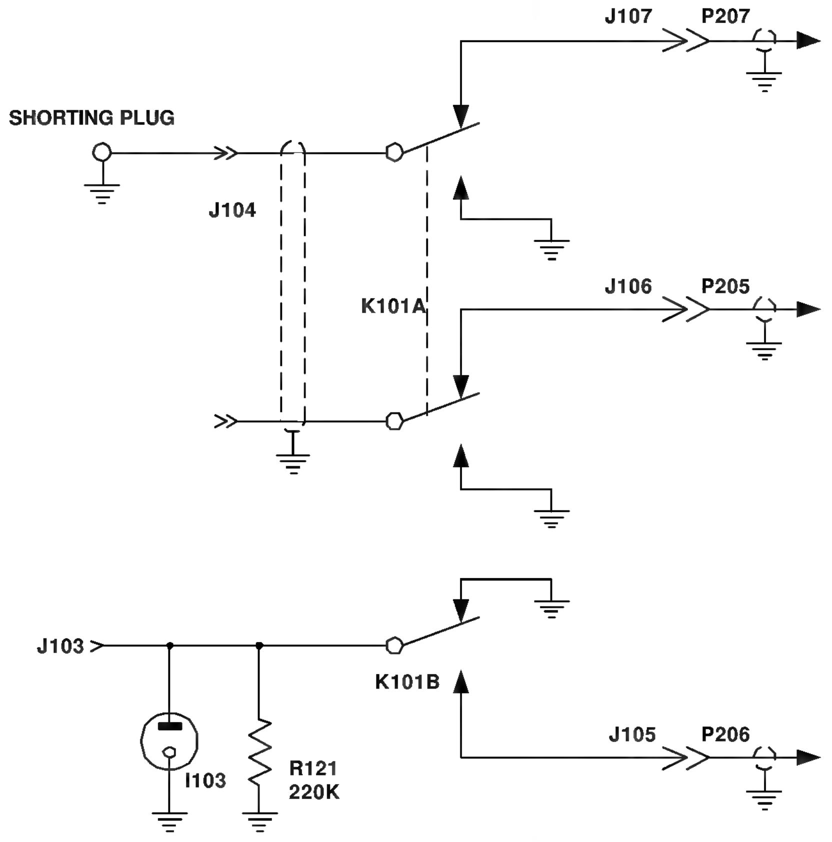

NOTES:
1. REVERSE CABLES TO J105 AND J106. USE J103 AS ANTENNA INPUT JACK.
2. SHORTING PLUG REQUIRED ON J104.

Figure 3-2 Antenna Input Connections Modified by Field Change 5 for Shipboard Installations[2]

3.2.8 Third Mixer and VFO.

Third mixer V204 heterodynes the output signals from V203 with the output of variable frequency oscillator V701.

The signal generated by this oscillator varies continuously from 2.955 to 2. 455 MHz as the receiver is tuned from 0.5 to 1 MHz, and varies from 3.455 to 2.455 MHz as the receiver is tuned from 1 to 32 MHz.

Z702 includes the plate tank circuit for the oscillator and the coupling circuit to the cathode of the third mixer. The two input signals are so coordinated that they produce a fixed difference frequency. 455 kHz, which is tuned by T208 and coupled to the first of four IF amplifiers.

[2] Courtesy of Pete Wokoun, KH6GRT

3.2.9 First IF Amplifier.

The first IF amplifier stage incorporates bandpass filters that permit IF bandpass selection between the limits of 0.1 and 16 kHz.

Six selections are provided: the two lower values by means of a crystal filter in the input circuit, and the four upper values by means of mechanical filters in the output circuit.

3.2.9.1 The crystal filter (figure 3-4) is used to obtain selectivities of 0.1 and 1 kHz. When the BANDWIDTH switch is set to .1 or 1, this filter is connected between the output of third mixer V204 and the Input to first IF amplifier V501.

The 455 kHz output signal is coupled from third mixer transformer T208 to crystal filter Z501. The crystal passes only those signals at or very close to 455 kHz.

Crystal holder and stray capacitances are neutralized by adjusting C520.

Coil L503 and capacitor C524 are tuned to 455 kHz.

3.2.9.2 When the BANDWIDTH switch is turned to .1, the crystal circuit is loaded by C503 in series with the combination of R502 in parallel with the series combination of C501 and R503. The exact value of R503 is chosen between 560 and 2,700 ohms, to provide a bandwidth of 0.1 kHz.

When the BANDWIDTH switch is turned to 1, C501 and R503 are removed from the circuit, and the bandpass is increased to 1 kHz. The value of resistor R502 is selected between 33K and 68K to provide a bandwidth of 1 kHz.

When the BANDWIDTH switch is turned to 2, 4, 8, or 16, T208 is coupled directly to the control grid of V501 through capacitor C501, thereby removing the crystal from the circuit.

3.2.9.3 Four mechanical filters are coupled to the shunt-fed plate circuit of V501 through coupling capacitor C553 and BANDWIDTH switches S502 and S503 (figure 3-5).

In some later production models of the receiver (table 1-9), variable trimmer capacitors were added across the input and output circuits of the mechanical filters to improve their tuning (figure 3-6).

When the BANDWIDTH switch is turned to .1, 1, or 2, 2 kHz mechanical filter FL502 is switched into the circuit. The 1, 8, and 16 positions of the BANDWIDTH switch use FL503 through FL305, respectively.

The bandpass of the IF amplifiers, and therefore of the entire receiver, is determined by the selection of one of the six switch positions of the BANDWIDTH switch. The very narrow bandwidth 0.1 kHz and 1 kHz positions of this switch also incorporate the crystal filter into the first IF amplifier circuit.

Switch S502 (front) connects the plate circuit of V501 to the input of the appropriate mechanical filter, and S503 (front) connects the output of the appropriate filter to the control grid circuit of second IF amplifier V502.

Switches S502 (rear) and S503 (rear) short circuit the input and output terminals of the unused mechanical filters.

Capacitors C507 through C510 and C513 through C516 resonate the input and output coils to prevent stray coupling in the unused filters to achieve proper gain and bandpass.

3.2.9.4 Magnetostriction is that property of certain materials that causes them to lengthen or shorten when they are in a magnetic field. Mechanical filters of the magnetostrictive type are capable of producing almost ideal bandpass characteristics.

The flatter the top and the steeper the sides of the bandpass curve, the better the filter. Part B of figure 3-7 compares the frequency response curve of a mechanical filter with that of a conventional tuned circuit.

3.2.9.5 Part A of figure 3-7 illustrates the construction of a typical mechanical filter. A signal current is through the input coil, which causes the driving wire to expand and contract due to magnetostriction.

This mechanical motion is transmitted to the disk resonators through the coupling wires. Each disk resonator is sharply resonant (mechanically) to the intermediate frequency, and several such disks, synchronously driven, are used to accomplish the required bandpass.

The last disk resonator is tied to the driven wire, which induces the IF output signal into the output coil. Biasing magnets are used to adjust the driving wire and the driven wire for the greatest magnetrostrictive action.

The mechanical filters used in the receiver are tuned and adjusted at the factory and require no further adjustment.

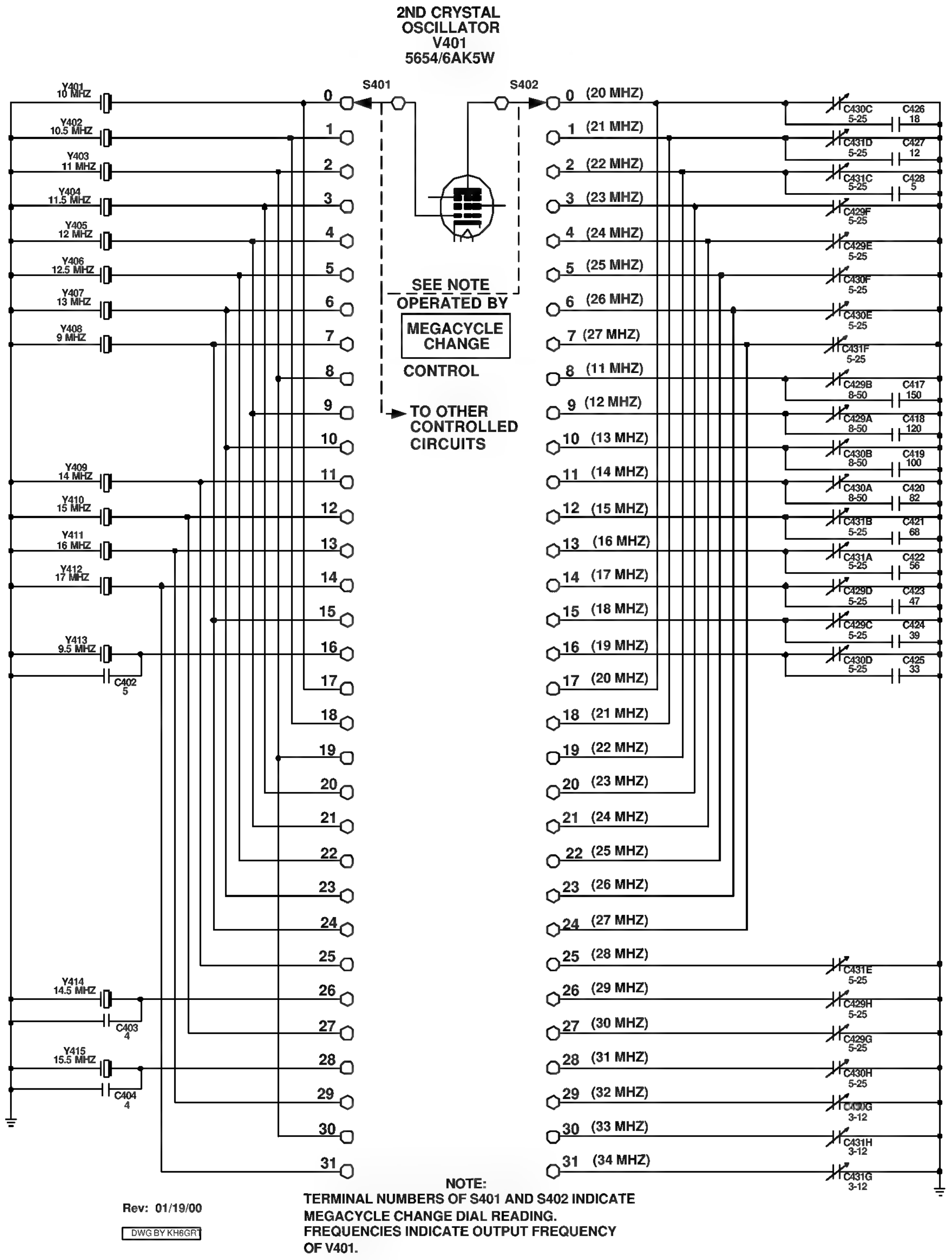

Figure 3-3 Second Crystal Oscillator V401, Crystal and Plate Circuit Switching Schematic Diagram[3]

[3] Courtesy of Pete Wokoun, KH6GRT

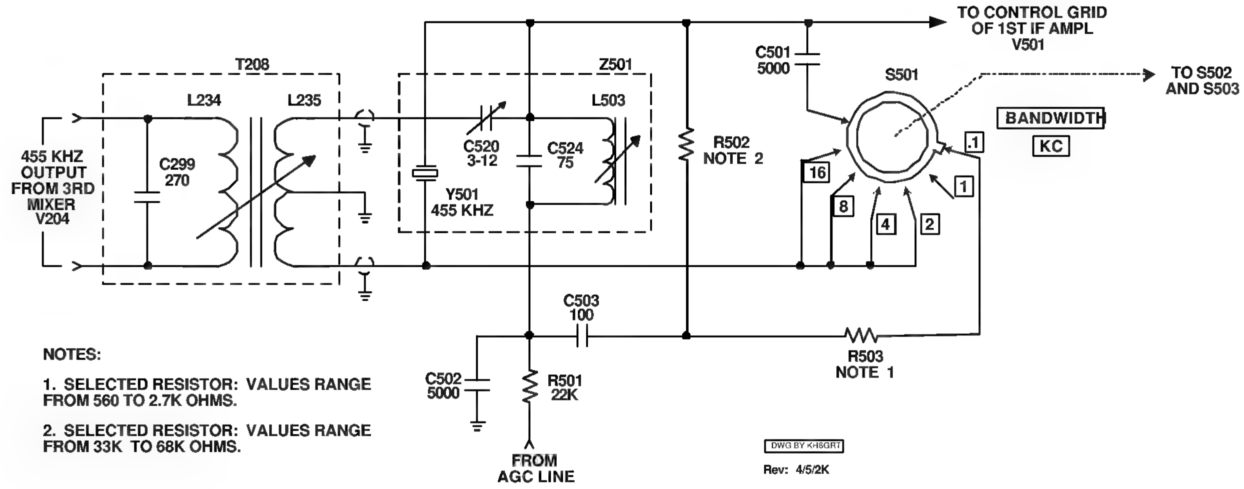

Figure 3-4 Crystal Filter, Simplified Schematic Diagram[4]

3.2.10 Second, Third, and Fourth IF Amplifiers.

Second, third, and fourth IF amplifiers V302, V503, and V504 respectively, amplify (in cascade) the 455 kHz signal from first IF amplifier V501.

At V504, the signal from transformer T503 is fed to detector V506B.

A second path for the 455 kHz signal is from the control grid of V504 to the control grid of IF cathode follower V509B.

3.2.10.1 The cathode of V502 returns to AF GAIN control R103 along with RF amplifier V201 and first IF amplifier V501.

Screwdriver-adjusted GAIN ADJ control R519, in the cathode circuit of V503, is adjusted during alignment so that the IF amplifiers will yield sufficient amplification.

This adjustment compensates for variations in tube gain and loss of tube gain as a result of aging.

The cathode circuit of V504 contains screwdriver-adjusted CARR-METER ADJ control R523. The setting of this adjustment has little effect on the gain of V504, since it varies the cathode resistance of V504 only between 680 and 698 ohms.

Tube V504 and its circuit components are used as one half of a bridge circuit containing CARRIER LEVEL meter M102.

[4] Courtesy of Pete Wokoun, KH6GRT

3.2.10.2 Adjustment of IF transformers T501, T502, and T503 is normally not included in the IF amplifier alignment procedure. They are initially tuned during receiver assembly, and should require no subsequent adjustment.

The bandwidth of these transformers is sufficiently wide to have negligible effect within the bandpass of even the 16 kHz mechanical filter. Their most important function is that of providing attenuation of IF signals more than 8 kHz removed from 455 kHz.

Neutralizing capacitor C525 is adjusted to cancel beat-frequency oscillator signals that might feed back from detector V506B through V504.

The secondary winding of T502 also feeds 455 kHz signals to IF cathode follower V509B, which supplies 50 ohm, 455 kHz signals to external circuits.

The output signal developed across T503 is connected to detector V506B.

In the IF sub-chassis with MOD numbers 1 and higher on Order No. 363-Phila-54, serial numbers 600 and higher on Order No. 08719-Phila-55, and all IF sub-chassis on Order No. 14-Phlla-56, transformers T501, T502, and T503 are stagger-tuned to increase bandwidth.

When one of these transformers is replaced in any sub-chassis, stagger-tuning procedures should be followed (paragraph 6.2.7.1).

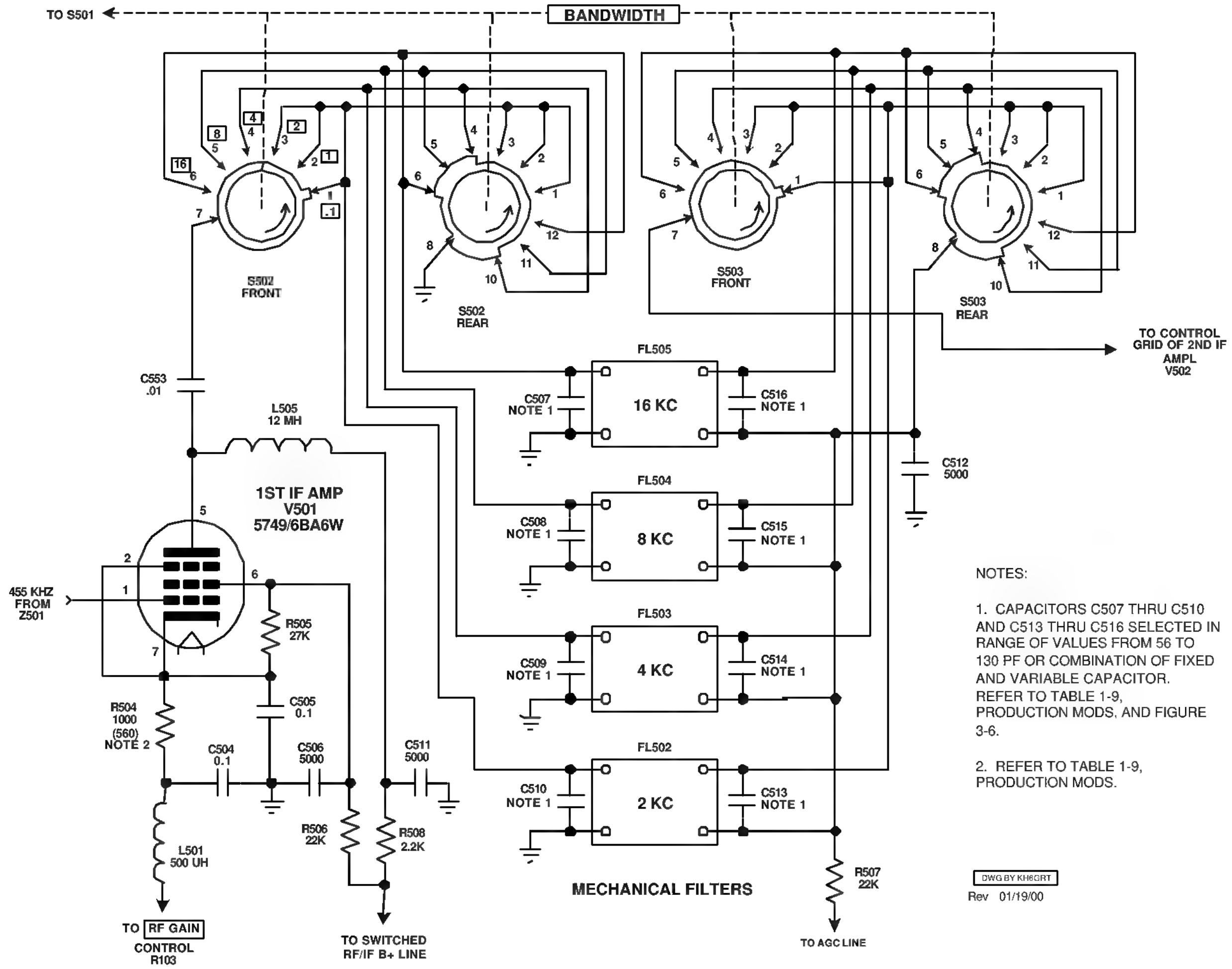

Figure 3-5 First IF Amplifier V501, Simplified Schematic Diagram[5]

[5] Courtesy of Pete Wokoun, KH6GRT

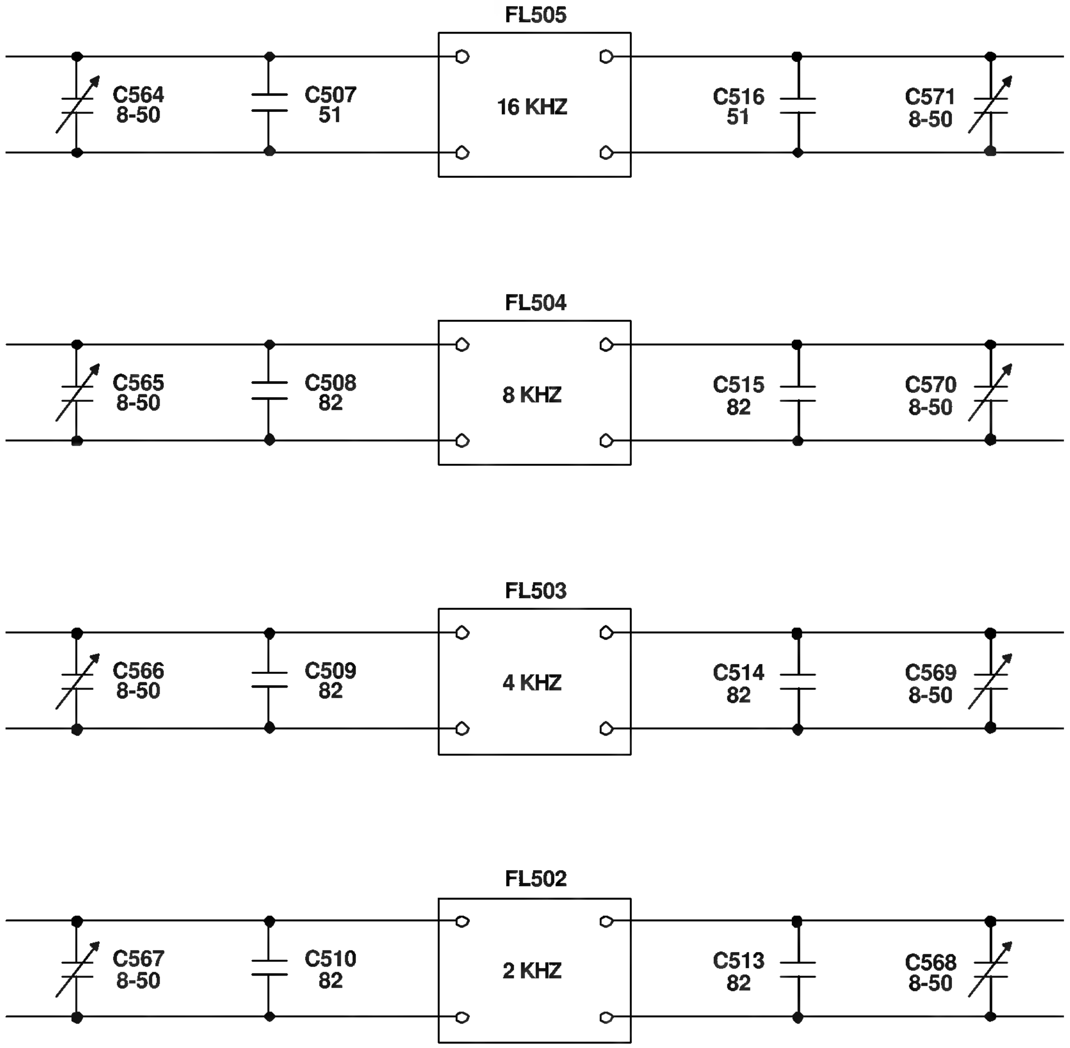

NOTES:

1. ALTERNATE TYPE FILTERS USED ONLY ON ORDER NO. 363-PHILA-54, MOD NO. 1 AND ABOVE, AND ALL ON ORDER NO. 14-PHILA-56.

2. WHEN ALTERNATE TYPE FILTERS FL504 AND FL505 ARE INSTALLED, CAPACITORS C507, C508, C515, AND C516 ARE REMOVED FROM THE CIRCUIT. THE ALTERNATE TYPE FILTERS ARE IDENTIFIED BY RED DECALS ON THEIR CASES THAT READ "WHEN USING THIS FILTER, DISCONNECT C508 AND C515 (82 UUF)" OR "WHEN USING THIS FILTER, DISCONNECT C507 AND C516 (51 UUF)".

3. R-390A/URR MFG BY EAC SERIAL NO. 1 THRU 460 HAVE CERAMIC FILTERS. REPLACE WITH MECHANICAL FILTERS WHEN CERAMIC TYPE ARE DEFECTIVE.

Rev: 12/13/99

DWG BY KH6GRT

Figure 3-6 Modified Mechanical IF Filters[6]

[6] Courtesy of Pete Wokoun, KH6GRT

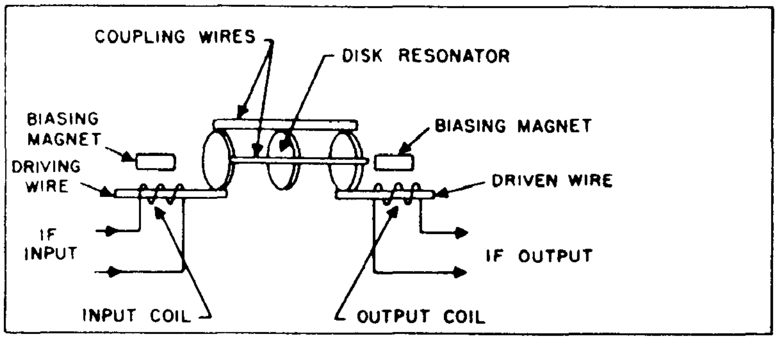

A. COMPONENTS OF A MECHANICAL FILTER

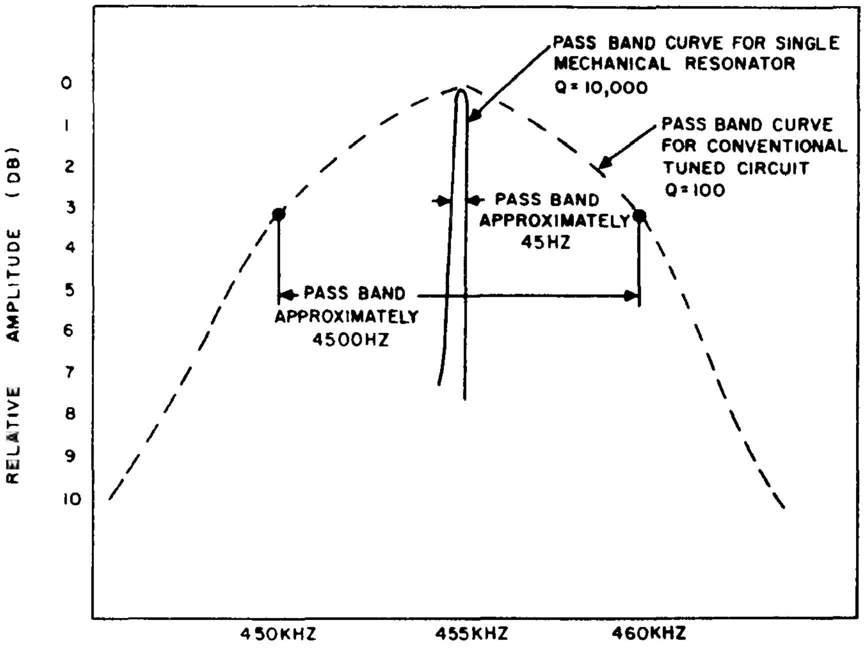

B. TYPICAL PASS BAND CURVES OF CONVENTIONAL TUNED CIRCUIT AND A SINGLE MECHANICAL RESONATOR

Figure 3-7. Typical Mechanical Filters

Figure 3-7 Typical Mechanical Filters

3.2.11 Detector and Limiter.

Detector V106B demodulates the 455 kHz signal to recover the intelligence from the modulated signals.

Limiter V507 removes noise pulses that exceed the amplitude of the modulation. The output of the detector passes through the limiter stage before it is fed to the audio channels.

3.2.11.1 The detector is connected as a half-wave diode connecting the control grid and plate together.

The polarity at DIODE LOAD terminals 1-1 and 15 of TB103 is negative with respect to chassis ground.

Limiter V507 is a series-type diode limiter, which couples the audio signals from the detector to the audio channels.

When LIMITER switch S108 is in the OFF position, audio signals pass through V507 without any limiting action.

When switch S108 is turned on, the amount of limiting is controlled by LIMITER control R120.

The limiter uses both sections of a twin-triode tube. The B-section of the tube is the negative peak limiter, and the A-section is the positive peak limiter. Both positive and negative noise peaks are clipped.

As the LIMITER control is turned more and more clockwise, the dc threshold voltage approaches chassis ground potential and more severe clipping occurs.

Figure 3- shows that the audio signal as well as the noise will be clipped if the LIMITER control is turned too far clockwise. The circuit automatically adjusts to any level of signal input and modulation percentage.

3.2.12 Beat-Frequency Oscillator.

Beat-frequency oscillator V505 generates a signal that can be varied from approximately 452 to 458 kHz (3 kHz above and 3 kHz below the intermediate frequency).

By beating this signal with the 455 kHz signal at detector V506B, audio signals that are variable from 0 to 3,000 Hz are produced.

Voltage for the plate and screen grid is obtained from the switched RF-IF B+ line through BFO switch S10l when the switch is in the ON position.

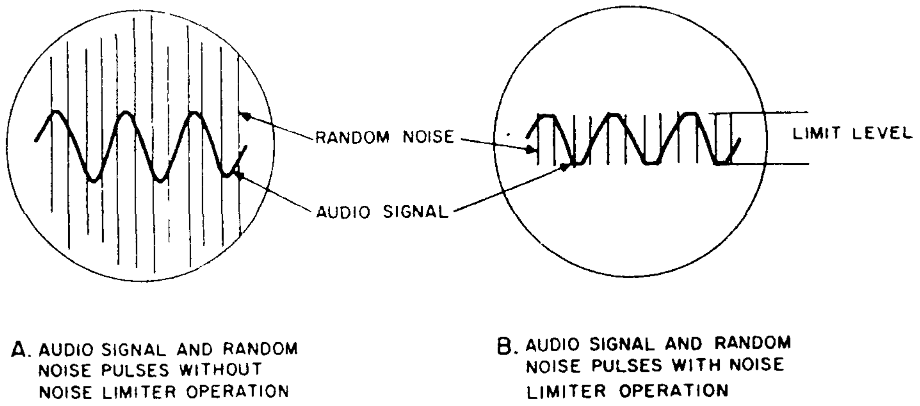

Figure 3-8. Typical Oscilloscope Presentation of Limiter Operation

Figure 3-8 Typical Oscilloscope Presentations of Limiter Operation

3.2.13 IF Cathode Follower.

IF cathode follower V509B provides a 50-ohm, 455 kHz output signal for use with a single sideband converter. This stage has negligible loading effect on the third and fourth IF amplifiers and isolates the AGC IF amplifier from them to prevent interaction.

3.2.14 Automatic Gain Control (AGC) Circuit.

When the receiver front-panel FUNCTION switch is set to the AGC position, AGC bias is fed to the control grid circuits of tubes V201 through V204 in the RF sub-chassis and to tubes V501, V502, and V503 in the IF sub-chassis.

This AGC bias controls the gain of these amplifiers in proportion to the average level of the incoming RF signal. As a result, signals appear to have relatively constant signal strength. The AGC circuit operates only for signals in excess of approximately 5 microvolts, to prevent reduction of receiver gain when receiving extremely weak signals.

The AGC switch on the front panel of the receiver allows the operator to select one of three AGC time-constant characteristics. These positions are SLOW, MED, and FAST, and are approximately 5 seconds, 0. 3 second, and 0. 015 second, respectively. This feature enables the operator to choose the AGC time constant which most effectively compensates for fading HF signals.

Three tubes are used in the AGC circuit: AGC IF amplifier V508, which amplifies the voltage from IF cathode follower V509B; AGC rectifier V509A, which rectifies the output of V508; and AGC time-constant tube V506A, which lengthens the time constant of the AGC circuit

when the AGC switch is set to the SLOW position.

When two receivers are used in a diversity reception system, the jumper on TB102, normally connected between terminals 3 and 4, is connected between terminals 4 and 5. This connects crystal diode CR101 into the circuits to prevent loading of the AGC circuit of the controlling receiver by the AGC circuit of the passive receiver.

3.2.15 CARRIER LEVEL Meter Circuit.

CARRIER LEVEL meter M102 indicates the relative strength of the received RF signal. Fourth IF amplifier V504, AGC time-constant tube V506A, and their circuit components form a bridge circuit which includes meter M102.

With no received RF signal and with the RF GAIN control turned fully counterclockwise, the current through V504 is adjusted, with CARR-METER ADJ R523, until M102 reads zero. Under these conditions no current flows through M102.

As an RF signal is applied to the receiver (RF GAIN control fully clockwise), AGC voltage is applied to V506A, and its plate current and the voltage drop across R548 decrease. This causes an unbalance in the bridge circuit. The greater the amplitude of the RF signal, the greater the unbalance and the larger the indication of M102. Thus, M102 indicates a relative value that is proportional to the received RF signal.

When the FUNCTION switch is in the MGC position, the control grid of V506A is grounded and the CARRIER LEVEL meter will read zero unless the signal input to the control grid of V504 is large enough to draw grid current. This condition indicates an overload, and the RF GAIN control should be turned counterclockwise until the CARRIER LEVEL meter indicates zero again.

3.2.16 First AF Amplifier and AF Cathode Follower.

The purpose of these two stages is to amplify the audio signals and to provide a circuit that will distribute the audio signals to the local and line audio channels. The gain of V601A is less than 10 dB, and the gain of V601B is less than unity.

The audio output of V601A is applied to AUDIO RESPONSE switch S104, and is either fed directly to the control grid of AF cathode follower V601B (WIDE position), or through 800 Hz bandpass filter FL601 (SHARP position) to V601B.

3.2.17 Local Audio Channel.

Audio signals are fed to the control grid of a-f amplifier V602A from LOCAL GAIN control R105. The audio output signals are induced in the secondary windings of T601 and are fed to LOCAL AUDIO terminal 6 of TB102. This audio output supplies at least 500 milliwatts to a 600-ohm load.

The same audio signals are supplied through an attenuator that includes R10l to terminal 8 of TB102 (PHNS terminals), and PHONES jack J102 on the receiver front panel. This power output is at least 1 milliwatt.

3.2.18 Line Audio Channel.

The operation of the line audio channel is similar to that of the local audio channel. Signal level is controlled by means of LINE GAIN potentiometer R104.

After amplification by V602B and V604, the audio output signals are induced in the secondary winding of T602.

The maximum audio output power available at TB103 terminals 10 and 13 is at least 10 milliwatts into a 600-ohm load.

The audio signals are also applied to LINE LEVEL meter M10l via LINE METER switch S105 and appropriate shunts and dividers. Switch S105 has four positions: OFF, +10, 0, and -10.

LINE LEVEL meter M10l is calibrated in volume units (VU), which are based on a zero reference level of 1 milliwatt (mw) into 600 ohms, or 0 dbm.

Volume units are used for complex audio signals and are similar to decibels which are used for pure sine waves. When LINE METER switch S105 is set at the 0 position, the LINE LEVEL meter is read directly.

When switch S105 is set at the -10 position, subtract -10 VU from the meter reading, and similarly, add +10 VU to the meter reading when S105 is set at the +10 position.

3.2.19 Power Supply Circuits, (See figure 5-11).

The primary windings of power transformer T801 can be connected in parallel for 115 vac operation or in series for 230 vac operation.

Shipboard receivers with field change No. 6 have silicon diode rectifiers instead of vacuum tube rectifiers for reduced heat dissipation.

3.2.19.1 After filtering, +215 vdc is applied directly as B+ to audio-frequency amplifiers.

Similarly, +205 vdc is applied directly to first crystal oscillator V207, second crystal oscillator V401, and VFO V701. The +205 vdc is applied via FUNCTION switch S102 as B+ to all RF and IF amplifiers in all positions except OFF and STANDBY.

Tube V605 is used as a shunt regulator for the +150 volt line to the two crystal oscillators and the VFO, and via S102 in the CAL position to the calibration oscillator tubes V205 and V206.

3.2.19.2 25 vac from transformer T801 is applied to rectifier CR102 which in turn furnishes 25 vdc to the break-in relay circuit (described in paragraph 3. 2. 2).

The 6.3 vac winding of T801 furnishes power to break-in relay K601. Filament and oven circuits which also receive 25 vac and 6. 3 vac from T801 are shown in figure 5-13.

The 25 vac winding supplies power to the filaments of V801 and V802, and by way of current regulator RT510 to the filaments of V505 and V701. In addition, oven heaters HR401 and HR701 receive 25 vac by way of switch S106.

The 6.3 vac winding of T801 supplies power to oven heater HR202 and to all other vacuum tube filaments.

3.3 MECHANICAL TUNING SYSTEM

3.3.1 Functional Description. (See figure 3-9).

The mechanical tuning system of Radio Receiver R-390A/URR controls the permeability tuning and switching to provide continuous linear tuning over a range of 0.5 to 32 MHz in 32 steps. Each step, or band of the MEGACYCLE CHANGE control (except the first band), is tuned linearly over a range of 1 MHz. The first band is tuned linearly from 0.5 to 1 MHz. Although the counter can be set between 00 000 and 00 500, no signal reception is possible within this range.

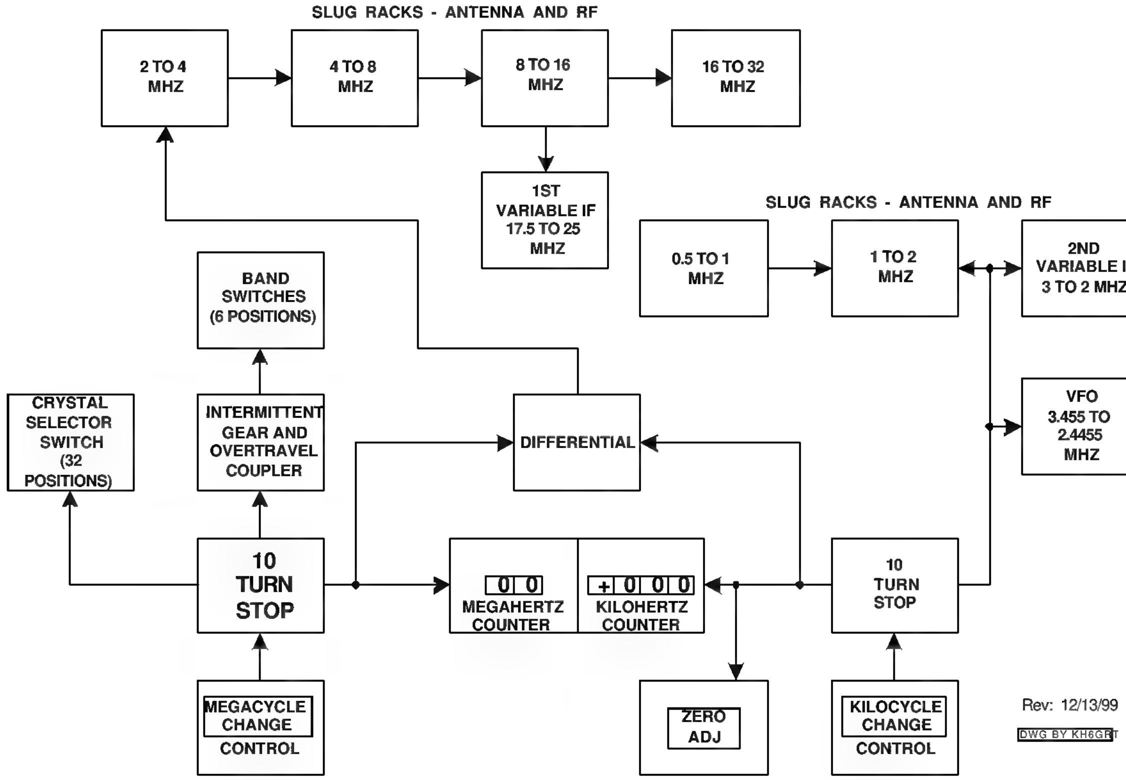

Figure 3-9 Tuning System, Mechanical Block Diagram[7]

[7] Courtesy of Pete Wokoun, KH6GRT

3.3.1.1 MEGACYCLE CHANGE Control. Operation of the MEGACYCLE CHANGE control (lower left) is limited to 10 turns by a progressive mechanical stop.

As the control is turned, the first two number wheels on the digital dial are rotated, and the numbers coincide with the frequency of reception in MHz from 0 through 31. At the same time, the crystal selector switch is switched to one of its 32 positions.

The RF band switches are also operated by this control through the intermittent gear and overtravel coupler.

This system operates the band switches at precisely the correct time as the MEGACYCLE CHANGE control is turned. The MEGACYCLE CHANGE control, through the differential, also controls the positioning of the 2- through 32-MHz antenna and RF slug racks, and the first variable IF slug racks.

3.3.1.2 KILOCYCLE CHANGE Control. The KILOCYCLE CHANGE control (lower right) is connected through a 10-turn stop to the VFO, the second variable IF the 1- to 2-MHz and 0.5- to 1-MHz antenna and IF slug racks.

The KILOCYCLE CHANGE control knob is also connected through the same differential as the MEGACYCLE CHANGE control knob and provides the movement for the 2- through 32-MHz antenna and RF slug racks and the first variable IF slug racks from the starting point established by the MEGACYCLE CHANGE control knob.

A ZERO ADJ control knob on the front panel of the receiver allows frequency dial correction over a small range to align the frequency-counter reading with the receiver frequency.

3.3.1.3 To tune continuously from 0.5 to 32 MHz at a linear rate, not only must the correct coils and transformers be selected, but the slugs in them must be moved at the proper rate to tune them simultaneously.

For example, to cover the 0.5- to 1-Mhz band, the slugs in coils T201 and Z201 move over their entire range, a distance of approximately eight-tenths of an inch, At the same time, the slugs in the coils of Z213 move approximately five-hundredths of an inch in covering this range.

This tuning is controlled with a single knob moving numerous gears and cams.

3.3.2 Detailed Mechanical Analysis. (See figure 3-10).

The gears in the illustration are identified by letter designations. The numbers indicate the number of teeth in each gear. The cams that furnish motion to the slug racks are shown as single units; actually, each slug rack has a roller at both ends and identical cams mounted on each end of the cam shaft.

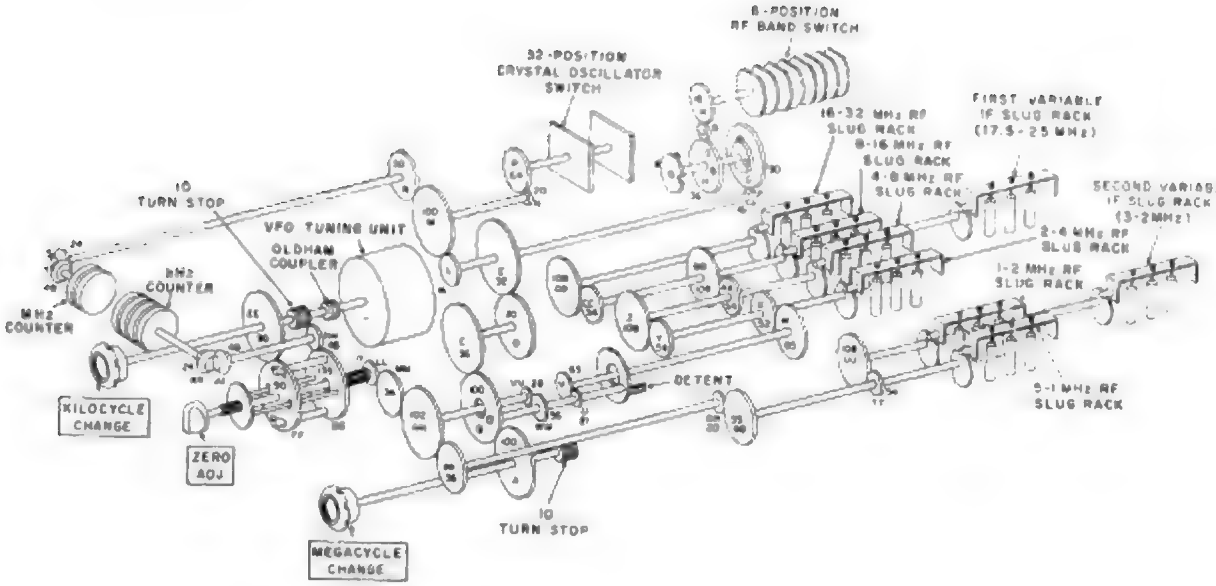

Figure 3-10 Tuning System, Simplified Mechanical Diagram

3.3.2.1 MEGACYCLE CHANGE Control.

1. As the MEGACYCLE CHANGE control is turned, it is limited to 10 turns by a 10-turn stop.

   The MHz counter wheels show the frequency band or step selected by the MEGACYCLE CHANGE control.

   As this control is rotated, time counter wheels are driven through gears (A), (B), (C), (D), (E), (L), (M), (R), (S), and (T).

2. The MEGACYCLE CHANGE control also operates the six-position r-f band switch through gears (A), (B), (C), (E), (F), (G), intermittent gear (H), and gears (J) and (K).

   The intermittent gear and over-travel coupler provides an intermittent rotary motion so that the switch is turned to each one of its six positions at exactly the right time.

   Gear (G) rotates continuously as the MEGACYCLE CHANGE control is turned; however, gears (J) and (K) are driven only during the part of the rotation of gear (G) when the teeth of intermittent gear (H) engage the teeth of gear (J).

3. Also operated by the MEGACYCLE CHANGE control is the 32-position crystal oscillator switch. This is accomplished through gears (A), (B), (C), (D), (E), (L), (M), (N), and (P).

4. The 2- to 4-MHz, 1- to 8-MHz, 8- to 16-MHz, and 16- to 32-MHz RF slug racks are moved by both the MEGACYCLE CHANGE and KILOCYCLE CHANGE controls through a differential gear system consisting of gears (NN), (B), (WW), and (U).

   a. The 2- to 4-MHz RF slug rack is operated by the MEGACYCLE CHANGE control through gears (A), (B), (Y), (V), (W), and (X).

   b. The 4- to 8-MHz RF slug rack is operated by the MEGACYCLE CHANGE control through gears (A), (B), (U), (V), (W), (X), (Y), and (Z).

   c. The 8- to 16-Mhz RF slug rack is operated by the MEGACYCLE CHANGE control through gears (A), (B), (U), (V), (W), (X), (Y), (Z), (AA), and (BB).

   d. The 16- to 32-MHz RF slug rack is operated by the MEGACYCLE CHANGE control through gears (A), (B), (U), (V), (W), (X), (Y), (Z), (AA), (BB), (CC), and (DD).

5. In each of the steps (bands 0.5-1 through 16-32 MHz), it is necessary to have an exact stopping point or reference for the circuit elements controlled by the MEGACYCLE CHANGE control.

   This is done by the MHz change detent. A disk with three equally spaced notches around its edge touches the MHz change detent and locks the disk when the MHz change detent falls into one of the three notches.

   This MHz change detent is made of spring material, and constantly maintains pressure against the three-notch disk.

6. The first variable IF slug rack (17.5 to 25 MHz) is driven by the MEGACYCLE CHANGE control in the same manner and on the same shaft as the 8- to 16-MHz RF slug rack.

   The gearing is through gears (A), (B), (U), (V), (W), (X), (Y), (Z), (AA), and (BB).

3.3.2.2 KILOCYCLE CHANGE Control.

1. The KILOCYCLE CHANGE control is limited to 10 turns by a 10-turn stop. The kHz counter wheels show the frequency selected by the KILOCYCLE CHANGE control.

   To permit overlapping of each band selected, the frequency range of this control is slightly greater than 1 MHz.

   As the KILOCYCLE CHANGE control is rotated, the kHz counter wheels are driven through gears (EE), (FF), (GG), (HH), (JJ), and (KK).

2. The VFO tuning unit is connected to the KILOCYCLE CHANGE control through the 10-turn stop and the Oldham coupler.

   The Oldham coupler is a coupling device for correcting slight misalignment of two shafts.

3. The 0.5 to 1-MHz RF slug rack cam is operated by the KILOCYCLE CHANGE control through gears (EE), (FF), (LL), (MM), (NN), (PP), (RR), and (SS).

   The 1- to 2-MHz RF slug rack cam is operated through gears (EE), (FF), (LL), (MM), (NN), (PP), (RR), (SS), (TT), and (UU).

4. The second variable IF slug rack cam (3 to 2 MHz) is operated by the KILOCYCLE CHANGE control through the same gears and same shaft as the 1- to 2-MHz RF slug rack cam.

5. The 2- to 4-MHz, 4- to 8-MHz, 8- to 16-MHz, 16- to 32-MHz RF slug rack cams are moved by the KILOCYCLE CHANGE control through a differential gear system.

   These RF slug rack cams are operated through the same gears as in 4a. through 4d. of 3. 3. 2.1, except for gears (A) and (B). Gears (EE), (FF), (LL), (MM), (NN), (VV), and (WW) are used instead of gears (A) and (B).

3.3.2.3 ZERO ADJ Control.

The ZERO ADJ control provides for correcting errors in calibration. A locking screw operated by the knob releases the clutch and locks the gear (GG).

Tuning over a range of approximately 15 kHz without moving the setting on the three kHz counter wheels on the frequency indicator is possible with the KILOCYCLE CHANGE control.

Operation of the ZERO ADJ knob in a counterclockwise direction engages the clutch and unlocks gear (GG).

4. - Chapter 4 - Functional Description

TABLE OF CONTENTS

4. - CHAPTER 4 - FUNCTIONAL DESCRIPTION 4-1

4.1 INTRODUCTION 4-2
4.2 MAINTENANCE REQUIREMENTS INDEX. 4-2
4.3 SCHEDULED MAINTENANCE PROCEDURES. 4-3
4.3.1 Procedure Q1 - Measure Receiver Sensitivity. 4-4
4.3.2 Procedure Q2 - Measure Receiver Bandwidth 4-5
4.3.3 Procedure Q3 - Measure AGC Level to Carrier Level. 4-6
4.3.4 Procedure SA4 - Operator's Maintenance (O.M.) Clean and Inspect Receiver 4-6
4.3.5 Procedure SA5 - Inspect and Lubricate the Mechanical Tuning System (0. M.). 4-7

TABLES

Table 4-1 - SCHEDULED MAINTENANCE INDEX 4-2
Table 4-2 - MAINTENANCE PROCEDURES CONTROL SETTINGS 4-3
Table 4-3 - FREQUENCY CHART 4-4
Table 4-4 - NORMAL BANDWIDTHS 4-5

4.1 INTRODUCTION

4.1.1 The tests prescribed herein provide a systematic and efficient method for checking and performing routine preventive maintenance on Radio Receiver R-390A/URR. These procedures, when performed as directed, will detect areas of subnormal performance, and also provide for systematic preventive maintenance of the equipment. Those tests that are designated “0. M.” may be performed as part of the Operational Maintenance Program by operating personnel. These tests should only be performed when the line voltage is 117 ± 6 Vac.

4.2 MAINTENANCE REQUIREMENTS INDEX.

PROCEDURE	SCHEDULED EQUIPMENT TESTS	TIME REQ’D	PERSONNEL REQUIREMENT
QUARTERLY			
1	Measure receiver sensitivity	45 min.	ETSN
2	Measure receiver bandwidth	30 min.	ETSN
3	Measure AGC level operation	15 min.	ETSN
SEMIANNUAL			
4	Clean and inspect receiver	15 min.	RMSN
5	Inspect and lubricate the mechanical tuning system	10 mm.	RMSN

Table 4-1 - SCHEDULED MAINTENANCE INDEX

4.3 SCHEDULED MAINTENANCE PROCEDURES.

Energize the receiver and test equipment and allow 15 minutes warm-up time. Unless specifically instructed in a test procedure, the receiver controls should be set as indicated in table 4-2.

CONTROL		POSITION
BFO switch	(S101)	OFF
FUNCTION switch	(S102)	MGC
BREAK IN ON-OFF switch	(S103)	OFF
AUDIO RESPONSE switch	(S104)	WIDE
LINE METER switch	(S105)	OFF
OVENS ON-OFF switch	(S106)	OFF
AGC switch	(S107)	MED
LIMITER switch	(S108)	OFF
BANDWIDTH KC switch	(S501)	8 KC
ANT TRIM control	(C225)	Peaked for each frequency
BFO PITCH control	(L508)	0
RF GAIN control	(R103)	10
LINE GAIN control	(R104)	0
LOCAL GAIN control	(R105)	Adjusted for audible signals
DIAL LOCK control		Counterclockwise

Table 4-2 - MAINTENANCE PROCEDURES CONTROL SETTINGS

If any of the preceding settings are changed in the course of a test procedure, the control should be returned to the position given in the table upon completion of the procedure.

4.3.1 Procedure Q1 - Measure Receiver Sensitivity.

Periodicity: Quarterly
Time Required: 45 mins.
Test Equipment: Signal Generator AN/URM-25( )

1. Energize and set receiver controls as given in paragraph 4.3.
2. Connect the RF OUTPUT jack of Signal Generator AN/URM-25( ) to receiver ANTENNA UNBALANCED jack J103.
3. Tune the receiver and signal generator to 750 kHz.
4. Turn BFO switch S101 to ON.
5. Set the signal generator controls for CW operation 100 µV output, and tune the signal generator frequency control for a zero beat with the receiver. To zero beat, turn LINE METER switch S105 to 0, LINE GAIN control R104 for an indication on LINE LEVEL meter M101 and tune the signal generator frequency for the bottom of the dip between two peaks on LINE LEVEL meter M101.
6. Turn BFO switch S101 to OFF.
7. Turn output of signal generator to minimum.
8. Adjust LINE GAIN control R104 for -10 vu reading on LINE LEVEL meter M10l.
9. Adjust the output of the signal generator for 30% modulation at 1000 Hz.
10. Increase the signal generator output until the LINE LEVEL meter M10l reads -5dB and adjust ANT TRIM control C-255 for a peak on the meter.
11. Increase the signal generator output until a 0 vu indication is read on the line level meter.
12. The signal generator output should be less than 3 uV.
13. Repeat the procedure for each of the frequencies listed in table 4-3. If these sensitivity requirements are not met, perform trouble isolation procedures given in paragraph 5. 5.

FREQUENCY (MHz)	FREQUENCY (MHz)	FREQUENCY (MHz)
3. 25	15. 75	25.75
8. 25	18.25	28.25
10.75	20.75	30.75
13.25	23.25	

Table 4-3 - FREQUENCY CHART

4.3.2 Procedure Q2 - Measure Receiver Bandwidth

Periodicity: Quarterly
Time Required: 30 min.
Test Equipment: Signal Generator AN/URM-25( )
Electronic Multimeter AN/USM-116( )

1. Energize and set receiver controls as given in paragraph 4. 3.
2. Connect the RF OUTPUT jack of Signal Generator AN/URM-25( ) to receiver ANTENNA UNBALANCED jack J103.
3. Connect Electronic Multimeter AN/USM-116( ) to DIODE LOAD jack on the front of the receiver.
4. Set BANDWIDTH KC switch S501 to position 1.
5. Tune both the receiver and signal generator to 1 MHz.
6. Adjust the KILOCYCLE CHANGE control for a peak indication on the electronic multimeter.
7. Adjust the signal generator output for a reading of 5 volts on the electronic multimeter.
8. Tune the receiver KILOCYCLE CHANGE control to one side of the center frequency until the multimeter reads 2.5 volts. Note the frequency indicated on the receiver frequency counter.
9. Tune the receiver KILOCYCLE CHANGE control to the other side of the center frequency until the meter reads 2.5 volts. Note the frequency indicated on the receiver frequency counter.
10. Subtract the lower from the higher of the two frequency readings for the receiver bandwidth.
11. Repeat this test for the other positions of BANDWIDTH KC switch S501. Refer to table 4—4 for the normal bandwidth for each position. If bandwidth is less than the given values, check IF and RF alignment (para 6.2.7, 6.2.10, 6.2.11, and 6.2.12).

*BANDWIDTH SETTINGS	NORMAL BANDWIDTHS
1	0.8 to 1.3
2	1.9 to 2.3
4	3.6 to 4.4
8	7.5 or more
16	12 or more

Table 4-4 - NORMAL BANDWIDTHS

*No bandwidth test is required for 0. 1 KC setting.

4.3.3 Procedure Q3 - Measure AGC Level to Carrier Level.

Periodicity: Quarterly
Time Required: 15 min.
Test Equipment: Signal Generator AN/URM-25( )

1. Energize and set receiver controls as given in paragraph 4. 3.
2. Connect the RF OUTPUT jack of Signal Generator AN/URM-25( ) to receiver ANTENNA UNBALANCED jack J-103.
3. Turn FUNCTION switch S102 to AGC position.
4. Tune signal generator and receiver to 15 MHz.
5. Increase signal generator output until a 20 dB reading is indicated on CARRIER LEVEL meter M102.
6. Increase the signal generator output in 20 dB steps and check that the carrier level meter reading increases 20 dB per step ±2 dB. If readings do not meet these requirements, perform trouble isolation tests in table 5-5, steps 17, 18 and 19.

4.3.4 Procedure SA4 - Operator's Maintenance (O.M.) Clean and Inspect Receiver.

Periodicity: Semiannual
Time Required: 15 min.
Test Equipment: Dry brush Solvent, Navy type 140—F
Pressurized dry air

1. Secure main power to receiver.
2. Use a clean, dry, lint-free cloth or a dry brush to remove dirt and accumulated matter from receiver parts. Use cleaning solvent, Navy type 140-F, for especially stubborn deposits. Use clean dry air from portable blower unit for lighter sediments in hard to reach areas.
3. Tighten all loose screws, bolts and nuts.
4. Inspect all cables and wiring for frayed, cut, deteriorated, or cracked insulation. Report all such conditions found.
5. All tubes should be checked for looseness by firm pressure applied downward. All tube shields and clamps must be locked in position.
6. Inspect resistors and other components for indications of overheating. If such indication is observed, further maintenance is necessary.

4.3.5 Procedure SA5 - Inspect and Lubricate the Mechanical Tuning System (0. M.).

Periodicity: Semiannual
Time Required: 10 min.
Test Equipment: Lubricant MIL-L-7970
Lubricant MIL-G-7421

1. Secure main power to the receiver.
2. Inspect the gear trains and cam racks for lubrication.
3. Turn the MEGACYCLE CHANGE and KILOCYCLE CHANGE controls throughout their ranges and observe that all gears, cams and shafts, bearings and guide slots operate smoothly.
4. Check the operation of BFO PITCH control L508 for free operation.
5. Lubricate in any of the above steps as necessary for proper operation. Use one drop of MIL-L-7970 for cam rollers and shaft bearings. Use MIL-G-7421 sparingly for guide slots and gears.

5. - Chapter 5 - Troubleshooting

TABLE OF CONTENTS

5. - CHAPTER 5 - TROUBLESHOOTING 5-1

5.1 INTRODUCTION 5-3
5.2 MAINTENANCE TURN-ON PROCEDURE 5-5
5.3 RELAYS, LAMPS AND OVERLOAD DEVICES 5-8
5.4 TROUBLESHOOTING INFORMATION 5-9
5.5 TROUBLE ISOLATION PROCEDURES 5-11
5.6 ZONING FOR SCHEMATIC DIAGRAMS FIGURES 5-18 THRU 5-24. 5-51

FIGURES

Figure 5-1 Terminal Numbers of RF and Variable IF Coils 5-12
Figure 5-2 Fabrication of Coaxial test Cables 5-13
Figure 5-3 Fabrication of Multi-conductor Test Cables 5-14
Figure 5-4 RF Sub-chassis, Voltage and Resistance Diagram 5-16
Figure 5-5 Crystal Oscillator Subchassis, Voltage Resistance Diagram 5-17
Figure 5-6 IF Sub-chassis, Voltage and Resistance Diagram 5-18
Figure 5-7 VFO Sub-chassis. Voltage and Resistance Diagram. 5-19
Figure 5-8 AF Sub-chassis, Voltage and Resistance Diagram 5-20
Figure 5-9 Power Supply Sub-chassis, Voltage and Resistance Diagram 5-21
Figure 5-10 IF and AF Sub-chassis Resistor and Capacitor Terminal Boards, ... 5-22
Figure 5-11 Power Distribution Diagram 5-37
Figure 5-12 Filament and Oven Circuits 5-38
Figure 5-13 Field Changes 5-39
Figure 5-14 Signal Flow Diagram, Part 1 of 4 - RF Stage 5-40
Figure 5-15 Signal Flow Diagram, Part 2 of 4 - Mixer Stages 5-41
Figure 5-16 Signal Flow Diagram, Part 3 of 4 - IF Stages 5-42
Figure 5-17 Signal Flow Diagram, Part 4 of 4 - Audio Stages 5-43
Figure 5-18 Schematic Diagram, Part 1 of 7 - RF Amplifier 5-44
Figure 5-19 Schematic Diagram, Part 2 of 7 - 1st Mixer and 1st Crystal Oscillator 5-45
Figure 5-20 Schematic Diagram, Part 3 of 7 - 2nd Mixer and VFO 5-46
Figure 5-21 Schematic Diagram, Part 4 of 7 - 2nd Crystal Oscillator 5-47
Figure 5-22 Schematic Diagram, Part 5 of 7 - IF Amplifiers, AGC, Limiter and Detector 5-48
Figure 5-23 Schematic Diagram, Part 6 of 7 - Line and Local Audio Amplifiers 5-49
Figure 5-24 Schematic Diagram, Part 7 of 7 - Power Supply 5-50

TABLES

Figure 5-1 Terminal Numbers of RF and Variable IF Coils 5-12
Figure 5-2 Fabrication of Coaxial test Cables 5-13
Figure 5-3 Fabrication of Multi-conductor Test Cables 5-14
Figure 5-4 RF Sub-chassis, Voltage and Resistance Diagram 5-16
Figure 5-5 Crystal Oscillator Subchassis, Voltage Resistance Diagram 5-17
Figure 5-6 IF Sub-chassis, Voltage and Resistance Diagram 5-18
Figure 5-7 VFO Sub-chassis. Voltage and Resistance Diagram 5-19
Figure 5-8 AF Sub-chassis, Voltage and Resistance Diagram 5-20
Figure 5-9 Power Supply Sub-chassis, Voltage and Resistance Diagram 5-21
Figure 5-10 IF and AF Sub-chassis Resistor and Capacitor Terminal Boards, ... 5-22
Figure 5-11 Power Distribution Diagram 5-37
Figure 5-12 Filament and Oven Circuits 5-38
Figure 5-13 - Field Changes 5-39
Figure 5-14 - Signal Flow Diagram, Part 1 of 4 - RF Stage 5-40
Figure 5-15 - Signal Flow Diagram, Part 2 of 4 - Mixer Stages 5-41
Figure 5-16 - Signal Flow Diagram, Part 3 of 4 - IF Stages 5-42
Figure 5-17 - Signal Flow Diagram, Part 4 of 4 - Audio Stages 5-43
Figure 5-18 - Schematic Diagram, Part 1 of 7 - RF Amplifier 5-44
Figure 5-19 - Schematic Diagram, Part 2 of 7 - 1st Mixer and 1st Crystal Oscillator 5-45
Figure 5-20 - Schematic Diagram, Part 3 of 7 - 2nd Mixer and VFO 5-46
Figure 5-21 - Schematic Diagram, Part 4 of 7 - 2nd Crystal Oscillator 5-47
Figure 5-22 - Schematic Diagram, Part 5 of 7 - IF Amplifiers, AGC, Limiter and Detector 5-48
Figure 5-23 - Schematic Diagram, Part 6 of 7 - Line and Local Audio Amplifiers 5-49
Figure 5-24 - Schematic Diagram, Part 7 of 7 - Power Supply 5-50

5.1 Introduction

5.1.1 Troubleshooting is a logical procedure used to locate a fault in an equipment. The procedure given here is based on a knowledge of electronic fundamentals, a thorough understanding of the radio receiver, and the application of information contained in this handbook.

5.1.2 One step in troubleshooting, symptom recognition, depends upon experience with equipment operating characteristics. Daily observation of the normal operation of the receiver helps one to recognize an abnormal condition if it should occur.

5.1.3 A second step, symptom elaboration, calls for the use of front panel controls, meters, and output devices to obtain better identification of the trouble. The maintenance turn-on procedure can be used to advantage in this step.

5.1.4 Following this, a logical decision can be made to select the most likely function responsible for the faulty operation. Here the over-all functional description (para 3-1) and its associated block diagram can be used as an aid.

5.1.5 Tests must then be made to determine whether the chosen function is the faulty one. The signal flow diagram is used in this step to find appropriate test points. Key steps in the trouble isolation tables provide normal indications as an aid in these tests and measurements.

5.1.6 When trouble is found in a certain function, it must be localized to a circuit and then a detail part. This is accomplished by following step-by-step procedures in the trouble isolation tables. Again, the signal flow diagram is useful, especially when supplemented by schematic diagrams and voltage and resistance charts. Functional and circuit descriptions should also be consulted.

5.1.7 Assuming that a faulty circuit and part is found, a review of the situation is in order, to determine whether the part is the cause of the trouble or that some other malfunction has caused the part to become defective.

5.1.8 General references were made above to a number of troubleshooting aids. More specific paragraph references are given in table 5-1 as they pertain to the individual subassemblies.

Table 5-1 - Troubleshooting Index

SUBASSEMBLY	VOLTAGE & RESISTANCE (FIG. NO.)	PARTS LOCATION (FIG. NO.)	ADJUSTMENT		REMOVE & REPLACE (PARA. NO.)
			(PARA. NO.)	(FIG. NO.)	
AF	5-8, 5-10	6-27, 6-28	-	-	6.3.14
Crystal Oscillator	5-5	6-12, 6-23, 6-24, 6-25	6.2.9	6-5	6.3.7, 6.3.8
IF	5-6, 5-10	6-5 6-16, 6-17, 6-18	6.2.7 6.2.8, 6.2.13, 6.2.15, 6.2.17	6-5	6.3.9, 6.3.10
Mainframe	-	6-9, 6-14, 6-15, 6-32	-	-	6.3.2, 6.3.15
Mechanical	-	6-1, 6-3, 6-8, 6-36	6.2.5, 6.2.6, 6.2.18	6-2, 6-13	6.3.16 thru 6.3.19
Power supply	5-9	6-29, 6-30	-	-	6.3.13
RF	5-4	6-19, 6-20, 6-21	6.2.10 6,2.11, 6.2.12, 6.2.14	5-1, 6-6	6.3.3 thru 6.3.6
VFO	5-7	6-25, 6-26	6.2.16	6-7	6.3.11, 6.3.12

5.2 Maintenance Turn-On Procedure

5.2.1 The maintenance turn-on procedure (table 5-2) is a step-by-step procedure to be used by maintenance personnel in bringing the equipment to an operating condition from a completely secured condition. Normal conditions are noted along with steps to be followed and reference paragraphs to be used if indications are abnormal,

5.2.2 If dial lamps fail to light, check the ac input fuse Fl0l and the ac input connections. Measure the ac Input voltage (see table 1-2). Check the 6. 3 volt circuits (figures 5-11 and 5-14). If no signal is heard, proceed with next step in table 5-2.

5.2.3 If at least one band is normal, make receiver RF-IF checks on faulty bands beginning with step 8 of table 5-5. If all bands are abnormal, begin at step 1 of table 5-5.

5.2.4 AGC circuits could be faulty. Perform steps 17, 18 and 19 of table 5-5.

5.2.5 Check RF input circuits, figure 5-13, sheet 1, zone 12B.

5.2.6 Perform steps 4 and 5 of table 5-5.

Table 5-2 - Maintenance Turn-On Procedure

PRIOR CONTROL SETTINGS:
AUDIO RESPONSE switch: WIDE
BANDWIDTH switch: 8 KC
RF GAIN control: 10
LIMITER control: OFF
LOCAL GAIN control: 6
ANTENNA connected
Loudspeaker or Headphones connected.

STEP	ACTION OR CONDITION	NORMAL INDICATION	
1	Turn FUNCTION switch to AGC.	Dial lamps light. Rushing noise or signal heard in speaker or headset.	5.2.2
2	Set MEGACYCLE CHANGE control at each band in turn,	Normal signal output on each band.	5.2.3
3	Tune KILOCYCLE CHANGE control across any band and then to one signal.	CARRIER LEVEL meter indicates strength of received signals.	5.2.4
4	Rotate ANT TRIM control.	Obtain peak indication on CARRIER LEVEL meter for each band.	5.2.5
5	Rotate LOCAL GAIN control in either direction,	Volume at loudspeaker or headset increases or decreases.	5.2.6
6	Rotate LINE GAIN control in either direction,	LINE LEVEL meter indication increases or decreases.	5.2.7
7	Rotate RF GAIN control in either direction.	Audio output and CARRIER LEVEL meter indication increase or decrease.	5.2.8
8	With receiver tuned away from any signal turn FUNCTION switch to MGC.	Noise level should increase slightly and CARRIER LEVEL should not indicate.	5.2.9
9	Turn FUNCTION switch to AGC and tune KILOCYCLE CHANGE control through several different signals.	Output volume nearly constant.	5.2.10
10	Turn FUNCTION switch to CAL and tune KILOCYCLE CHANGE control.	Deflection of at least 40 dB on CARRIER LEVEL meter at each 100 kHz reading.	5.2.11
11	Turn LIMITER fully clockwise.	Noise peaks are reduced in amplitude; audio distortion increases.	5.2.12

STEP	ACTION OR CONDITION	NORMAL INDICATION	
12*	Turn BREAK IN relay switch to ON and short BRK IN terminal 9 on rear panel to ground momentarily	Break-in relay functions to silence receiver.	5.2.13
13	Turn LINE METER switch to 0 and adjust LINE GAIN control for a meter indication at VU mark.	Meter adjusts to VU mark (0 dB).	5.2.14
14	Turn LINE METER switch to +10.	LINE LEVEL meter indicates -10.	5.2.15
15	Turn LINE METER switch to -10.	Meter indicates off scale to right.	5.2.15
16	Turn LINE METER switch to OFF.	No indication on LINE LEVEL meter.	5.2.15
17	Turn BFO control to ON, tune in a CW signal and vary the BFO PITCH control.	Beat note of signal is audible and varies.	5.2.16
18	Turn BANDWIDTH switch from 16 kHz to 0. 1 kHz.	Selectivity becomes sharper and noise decreases. Only low-frequency tones are heard in the counterclockwise positions.	5.2.17
19	Operate AUDIO RESPONSE switch through both positions.	Permits amplification of full AF range in WIDE position and 800 Hz in SHARP position.	5.2.18

*For Shore Stations only.

5.2.7 Perform step 4 of table 5-5.

5.2.8 Check cathode bias line, figure 5-12, sheet 1, zone B and figure 5-14, Zone A.

5.2.9 Check MGC switching circuit, figure 5-14, zone C.

5.2.10 Perform AGC circuit tests given in steps 17, 18 and 19 of table 5-5.

5.2.11 Perform calibration oscillator tests given in steps 20, 21 and 22 of table 5-5.

5.2.12 Check limiter circuit, figure 5-14, zone D or perform step 6 of table 5-5.

5.2.13 Check break-in relay circuits shown in figure 5-12, zone C and figure 5-15, zone C.

5.2.14 Perform line AF amplifier tests given in step 6 of table 5-5.

5.2.15 Check line meter switching circuits shown in figure 5-21, zone D.

5.2.16 Check BFO circuit shown in figure 5-14, zone D.

5.2.17 Check IF filter circuits shown in figure 5-14, zone A.

5.2.18 Check AF filter circuits shown in figure 5-15, zone A.

5.3 Relays, Lamps and Overload Devices

(See Table 5-3.)

Table 5-3 - Relays, Lamps, and Overload Devices

REF DESIG	FUNCTIONAL NAME OF ITEM OR CIRCUIT	ENERGIZING VOLTAGE AND/OR RATING	FIGURE REFERENCE
RELAYS			
K101	Antenna relay Break-in-relay	24 Vdc 6.3Vdc	5-12 5-11, 5-12
LAMPS			
I101 I102 I103	Pilot lamp Pilot lamp Antenna overload	6V, 0.20 amp 6V, 0.20 amp 65V, 1/4 watt	5-14 5-14 5-13
FUSES			
FI0l	AC input line	With 115V input 3 amp (OVENS sw ON) 2 amp (OVENS sw OFF) With 230V input 1-1/2 amp (OVENS sw ON) 1 amp (OVENS sw OFF)	5-11
F102 F103	Main B+ line RF - IF B+ line	1/4 amp 1/8 amp	5-11 5-11

5.4 Troubleshooting Information

5.4.1 Troubleshooting efficiency can be improved through the knowledge and intelligent use of the many aids available to the technician. For example, the R-390A/URR Receiver is equipped with a number of built-in features which can be used to advantage in troubleshooting. These features will be discussed here along with other suggestions concerning good practices for detecting and locating trouble.

5.4.2 Visual Inspection. The importance of performing a careful visual inspection before launching into functional or detailed troubleshooting is often overlooked. Some suggestions, which can be enlarged upon by an observant technician, are given in table 5-3.

5.4.2.1 Visual inspection can be broken down into external and internal areas of inspection. External inspection includes power and signal input connections, rear terminal board linkages, and output signal connections.

1. Check the input power connector, the fuses and fuse holders. See table 2-3 for proper fuse ratings.
2. Inspect the antenna input connections.
3. Inspect the audio output connections and phone jack.
4. Check the jumpers on the rear panel terminal boards which provide audio and AGC linkages.
5. Check for loose or missing knobs, or damage to meters.

5.4.2.2 Internal inspection concerns tubes and connectors.

1. See that tubes are unbroken, are properly seated in their sockets and are equipped with tube shields where applicable.
2. Observe that all subassemblies are securely fastened and completely interconnected.
3. Look for any evidence of overheated components or charred or frayed insulation.

5.4.3 Built-In Troubleshooting Aids. The built-in features of the equipment which aid the maintenance man include the following: carrier level meter, line level meter, and calibration oscillator. The output transducers, phones or speaker, can also be used as sensing devices for the detection of trouble. The CARRIER LEVEL meter measures the relative signal strength of the incoming RF or test signals. Indications on this meter are proportional to those at the AGC terminals on the rear panel of the receiver. The LINE LEVEL meter readings can be translated into audio output or power ratio readings. The LINE METER switch extends the range of the LINE LEVEL meter over a 40-dB range.

5.4.3.1 The calibration oscillator, while designed primarily for calibration checks can also be used in conjunction with the CARRIER LEVEL meter for rough sensitivity checks across the entire frequency range (refer to table 5-2, step 10). The phones or speaker can also be used for rough sensitivity checks by listening to the relative signal or noise levels. Then too, other faults such as excessive hum, noise, or interference, or intermittent conditions can be detected by this means.

5.4.3.2 These built-in features can be used to advantage by performing the maintenance turn-on-procedures (paragraph 5.2) and making the appropriate observations.

5.4.4 Trouble Isolation. Physically, the equipment consists of a main frame and six subchassis as listed in table 5-1. Functionally, the receiver can be divided into four subsystems, namely, the power supply, the AF, the IF, and the RF circuits. The trouble isolation table (5-5) is based on this functional approach, and tests are arranged in the order named above.

5.4.4.1 Steps 1, 2 and 3 are concerned with power supply tests, since this function is common to and required by the other three functions. Steps 4 through 7 concern the audio circuits. Steps 4 and 5 check out the over-all audio function. Steps 6 and 7 are entered only if there is audio trouble; they are stage-by-stage checks that progress from output to input. Steps 8 and 9 concern, the IF circuits. Step 8 checks out the overall IF function. Step 9 is a stage-by-stage check, that progresses from the detector back to the RF circuits. Steps 10 through 16 are stage-by-stage RF circuit checks which lead back from the third mixer to the antenna.

5.4.4.2 The RF function includes several local oscillators which, since they are internal signal generators, can be checked independently as described in paragraph 5.5.3. In addition, AGC circuits are checked in steps 17, 18 and 19, and calibration oscillator circuits are checked in steps 20, 21 and 22.

5.4.5 Subchassis Removal for Troubleshooting.

⇒ **Caution:**	Do not attempt removal or replacement of parts or subchassis before reading the instructions in paragraph 6.3.1 through 6.3.1.3.

5.4.5.1 When testing or troubleshooting the receiver, do not remove a subchassis unless it is absolutely necessary. Test cables are required for operating a subchassis out of the receiver (para 5.5.1). If a receiver in good operating condition is available, a subchassis may be connected from it, directly into the receiver being repaired.

⇒ **Note:**	Avoid disturbing the synchronization of the RF gear train assembly with the RF, crystal oscillator, or VFO subchassis.

5.4.5.2 To avoid removing a subchassis when voltage is to be measured or when a signal is to be injected at a tube-socket pin that does not have a test point, remove the tube and use a tube adapter with test points. The RF tuning coils and transformers on the RF subchassis can be removed readily (para 6.3.4.3), if necessary, to permit measurement of voltage or resistance at the socket contacts, or measurement of the voltage or resistance at the socket contacts, or measurement of the continuity of the coils. If trouble is suspected in the RF subchassis, perform as much detailed troubleshooting as possible before removing it to be sure that the trouble is in the subchassis, since removal and replacement of this subchassis is time-consuming.

5.4.5.3 Figure 5-1 shows the numbers of the terminals on the RF and the variable IF coils as seen from the bottom of the RF subchassis. These numbers are used to identify the terminals in the schematic diagrams in this manual.

5.5 Trouble Isolation Procedures

5.5.1 Test Cable Data (See figures 5-2 and 5-3). Test cables are required when operating subchassis out of the receiver. Make all cables 24 inches long. Table 5-4 contains plug and jack reference designations for each test cable required.

Table 5-4 Test Cable Data

FROM PLUG NO.	CABLE TYPE	TO JACK NO.
COAXIAL TEST CABLES		
P717	RG-187/U	J217
P215	RG-187/U	J415
P207	RG-187/U	J107
P206	RG-187/U	J106
P205	RG-187/U	J105
P218	RG-187/U	J518
P213	RG-187/U	J513
MULTICONDUCTOR TEST CABLES		
P108	All shielded and unshielded wires to be no smaller than 18 gauge stranded wire. Refer to figure 5-3.	J208
P109		J709
P110		J410
P111		J811
P112		J512
P119		J619
P120		J620

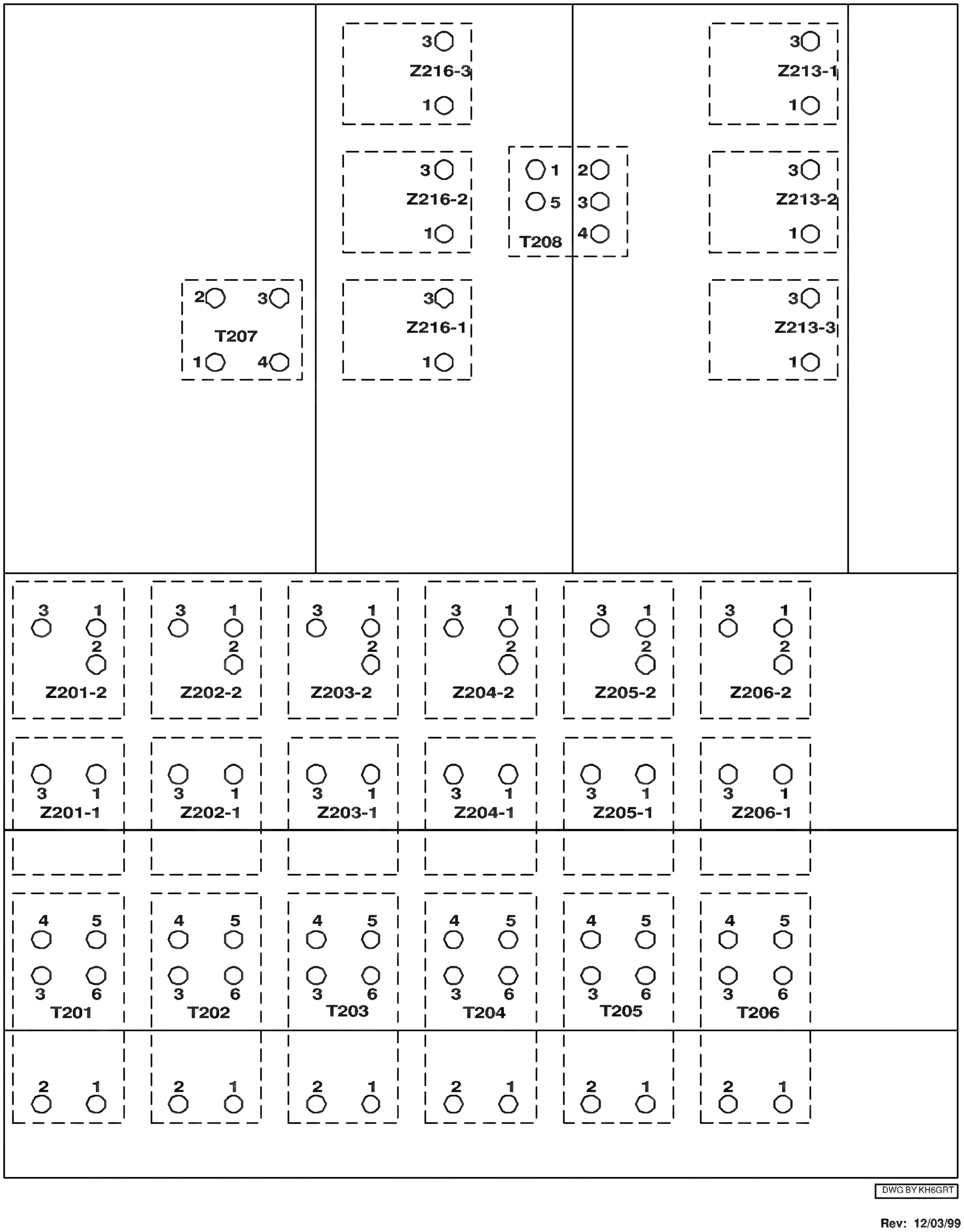

Figure 5-1 Terminal Numbers of RF and Variable IF Coils[1]

[1] Courtesy of Pete Wokoun, KH6GRT

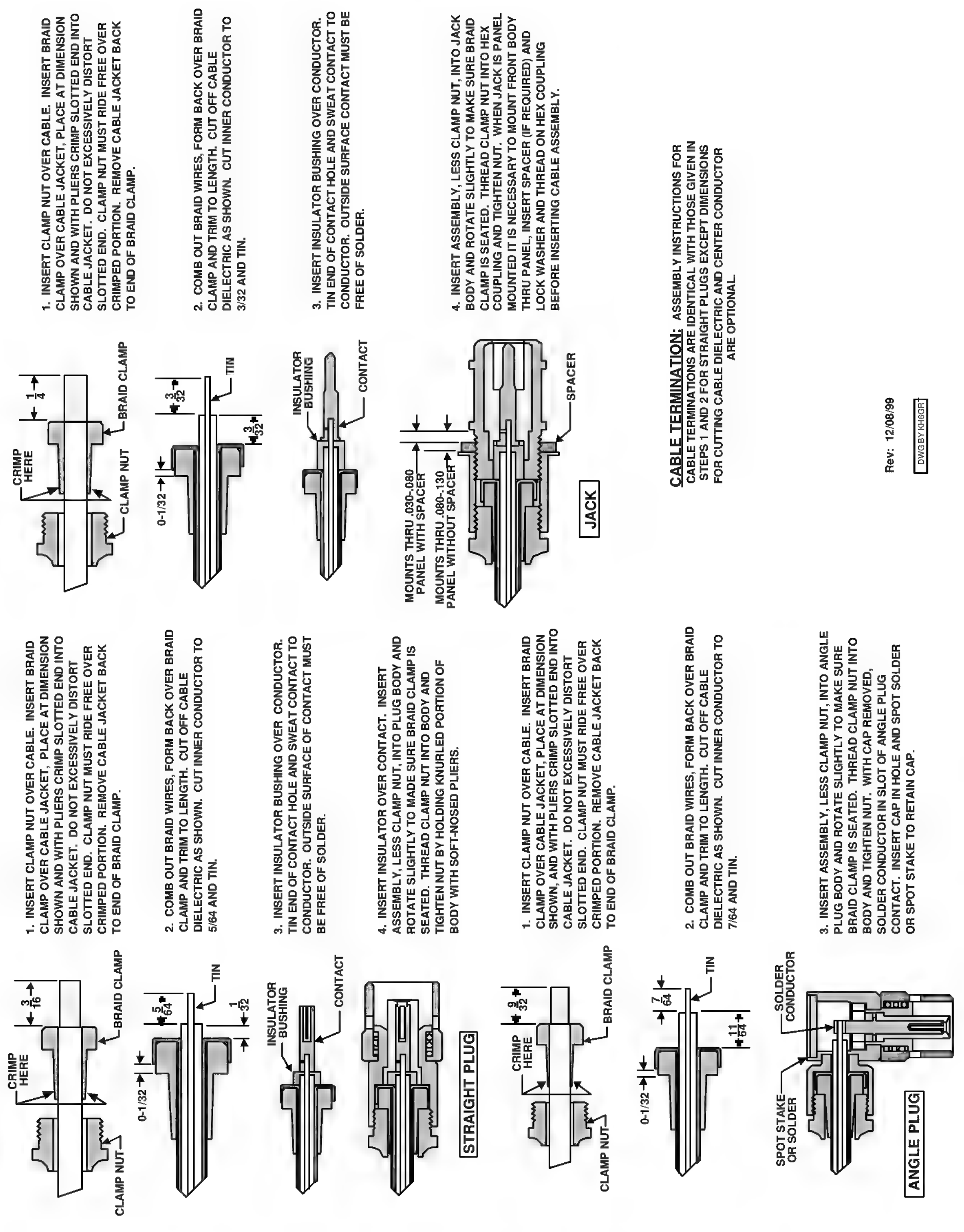

Figure 5-2 Fabrication of Coaxial test Cables[2]

[2] Courtesy of Pete Wokoun, KH6GRT

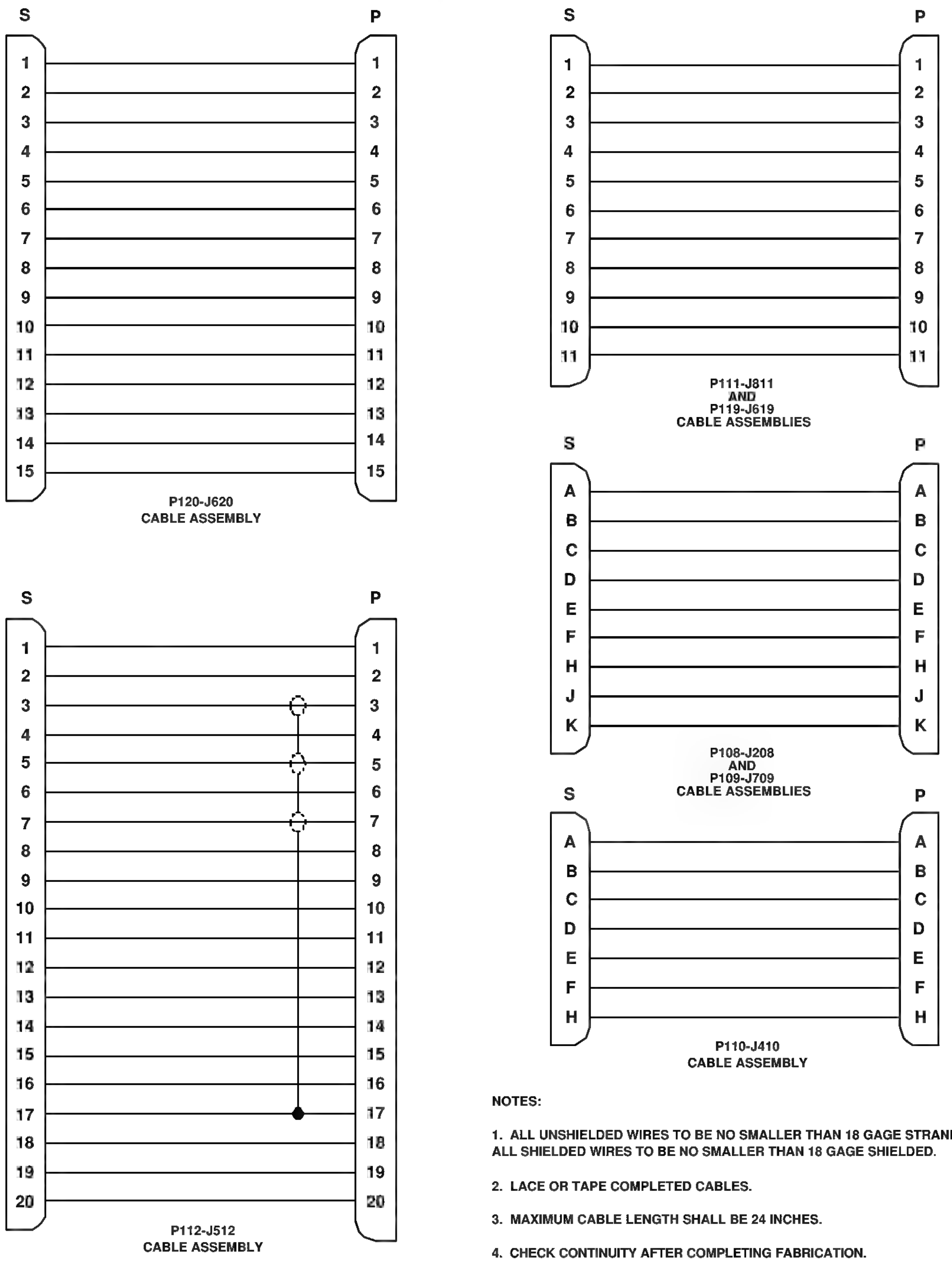

NOTES:

1. ALL UNSHIELDED WIRES TO BE NO SMALLER THAN 18 GAGE STRANDED WIRE. ALL SHIELDED WIRES TO BE NO SMALLER THAN 18 GAGE SHIELDED.

2. LACE OR TAPE COMPLETED CABLES.

3. MAXIMUM CABLE LENGTH SHALL BE 24 INCHES.

4. CHECK CONTINUITY AFTER COMPLETING FABRICATION.

5. LABEL CABLES FOR IDENTIFICATION.

Rev: 12/04/99

DWG BY KH6GRT

Figure 5-3 Fabrication of Multi-conductor Test Cables[3]

[3] Courtesy of Pete Wokoun, KH6GRT

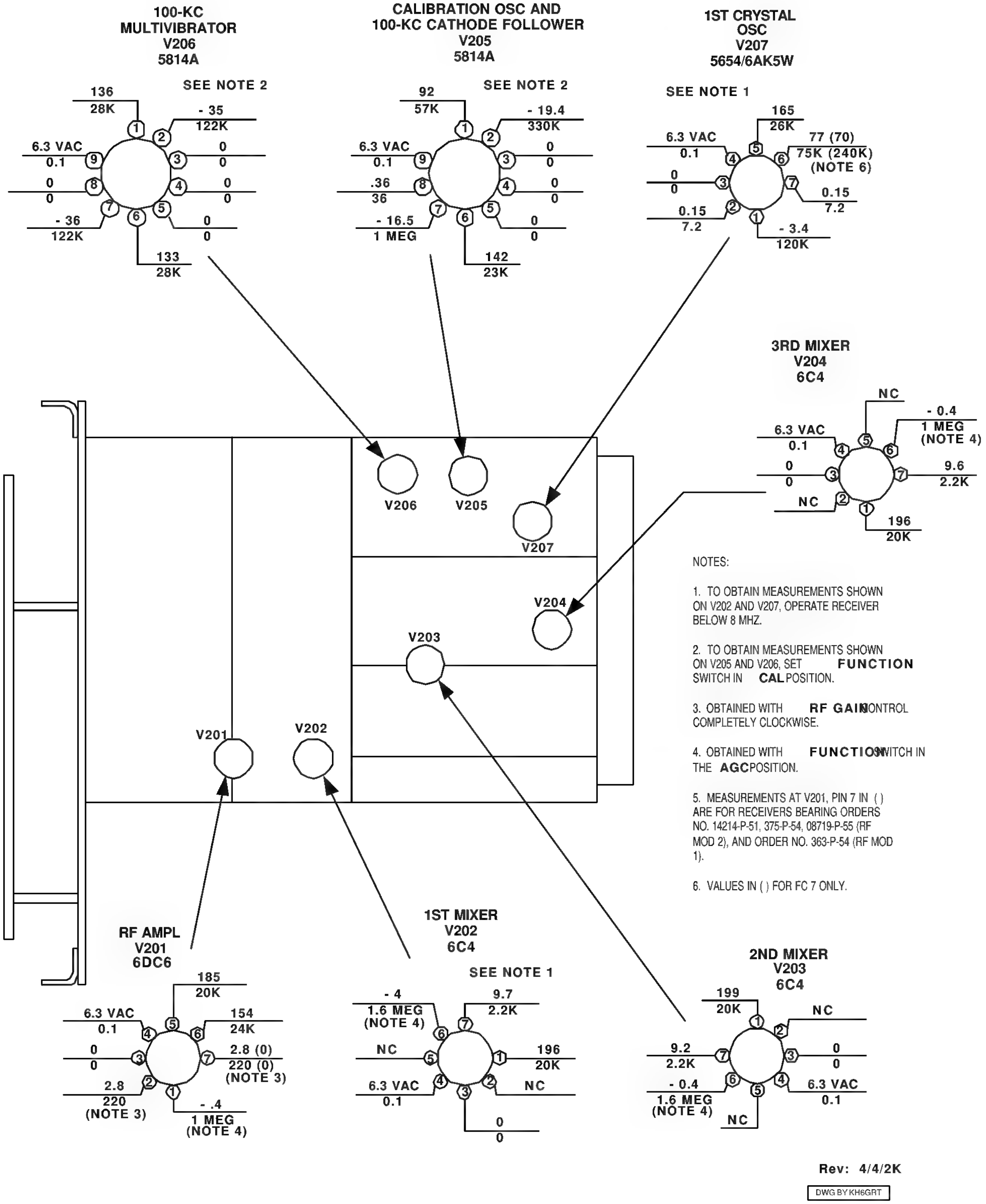

NOTES:

1. TO OBTAIN MEASUREMENTS SHOWN ON V202 AND V207, OPERATE RECEIVER BELOW 8 MHZ.

2. TO OBTAIN MEASUREMENTS SHOWN ON V205 AND V206, SET **FUNCTION** SWITCH IN **CAL** POSITION.

3. OBTAINED WITH **RF GAIN** CONTROL COMPLETELY CLOCKWISE.

4. OBTAINED WITH **FUNCTION** SWITCH IN THE **AGC** POSITION.

5. MEASUREMENTS AT V201, PIN 7 IN ( ) ARE FOR RECEIVERS BEARING ORDERS NO. 14214-P-51, 375-P-54, 08719-P-55 (RF MOD 2), AND ORDER NO. 363-P-54 (RF MOD 1).

6. VALUES IN ( ) FOR FC 7 ONLY.

Figure 5-4 RF Sub-chassis, Voltage and Resistance Diagram[4]

5.5.2 Initial Control Settings. Use the control settings given below before performing any test or troubleshooting procedure. Many of the tests that follow repeat some of these settings, and others refer back to this paragraph to stress the importance of using the proper control settings. Observe these control settings, and change them only when instructions in a particular procedure direct different control settings.

LINE METER	OFF
LINE GAIN	0
AGC	MED
LIMITER	OFF
AUDIO RESPONSE	WIDE
BANDWIDTH	8
BFO PITCH	0
BREAK IN	OFF
FUNCTION	MGC
ANT TRIM	0, or maximum output
BFO	OFF
DIAL LOCK	Unlocked, fully counterclockwise
ZERO ADJ	Disengaged, fully counterclockwise
LOCAL GAIN	10, or desired volume
OVENS	OFF
MEGACYCLE CHANGE	01, or as specified
KILOCYCLE CHANGE	510, or as specified
RF GAIN	10

5.5. 3 Oscillator Injection Voltage Tests (See figure 5-13.) To check the conversion oscillators (V207, V401, and V701) to see if they are oscillating, turn the FUNCTION switch to STANDBY to remove B+ from all tubes except the conversion oscillators. The cathodes and control grids of the mixers act as rectifiers of the oscillator voltage at test points E209, E210, and E211. The voltage at test point E402 (figure 5-13) is the grid leak bias at the control grid of V401.

[4] Courtesy of Pete Wokoun, KH6GRT

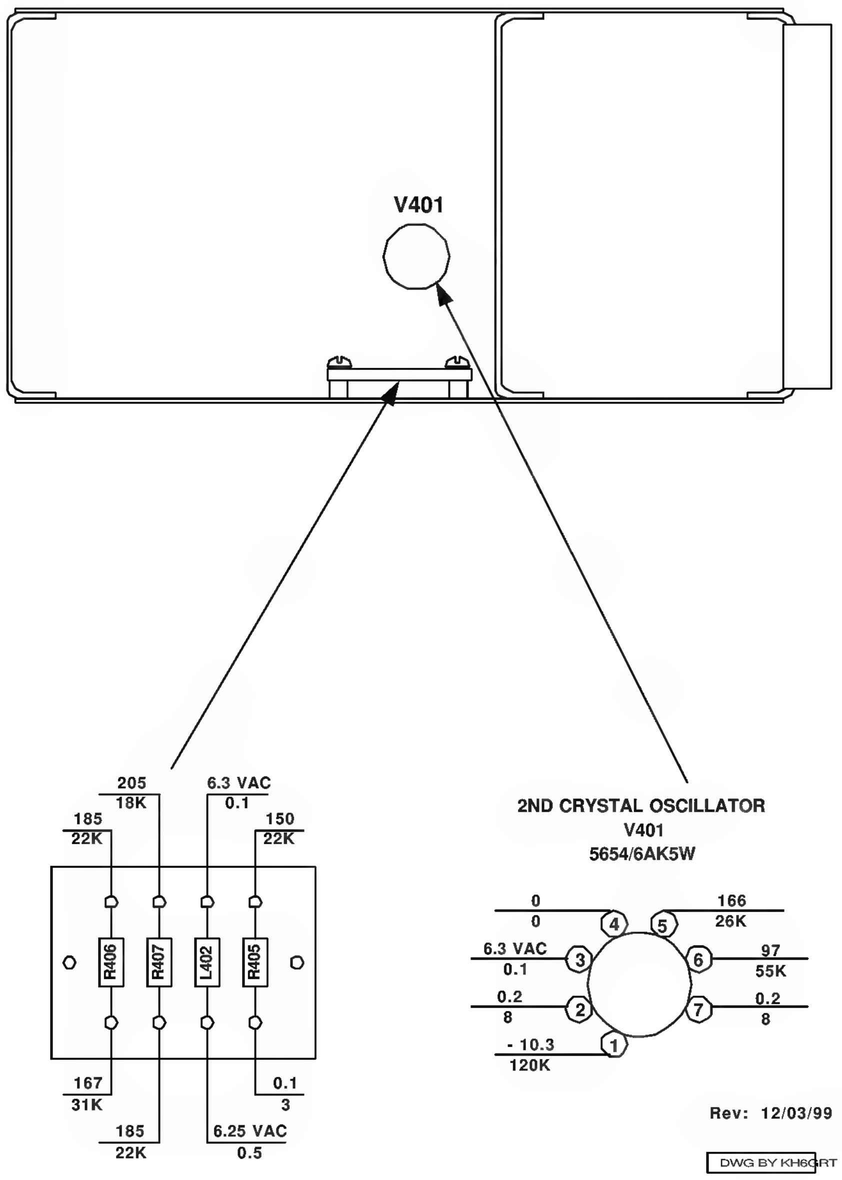

Figure 5-5 Crystal Oscillator Subchassis, Voltage Resistance Diagram[5]

[5] Courtesy of Pete Wokoun, KH6GRT

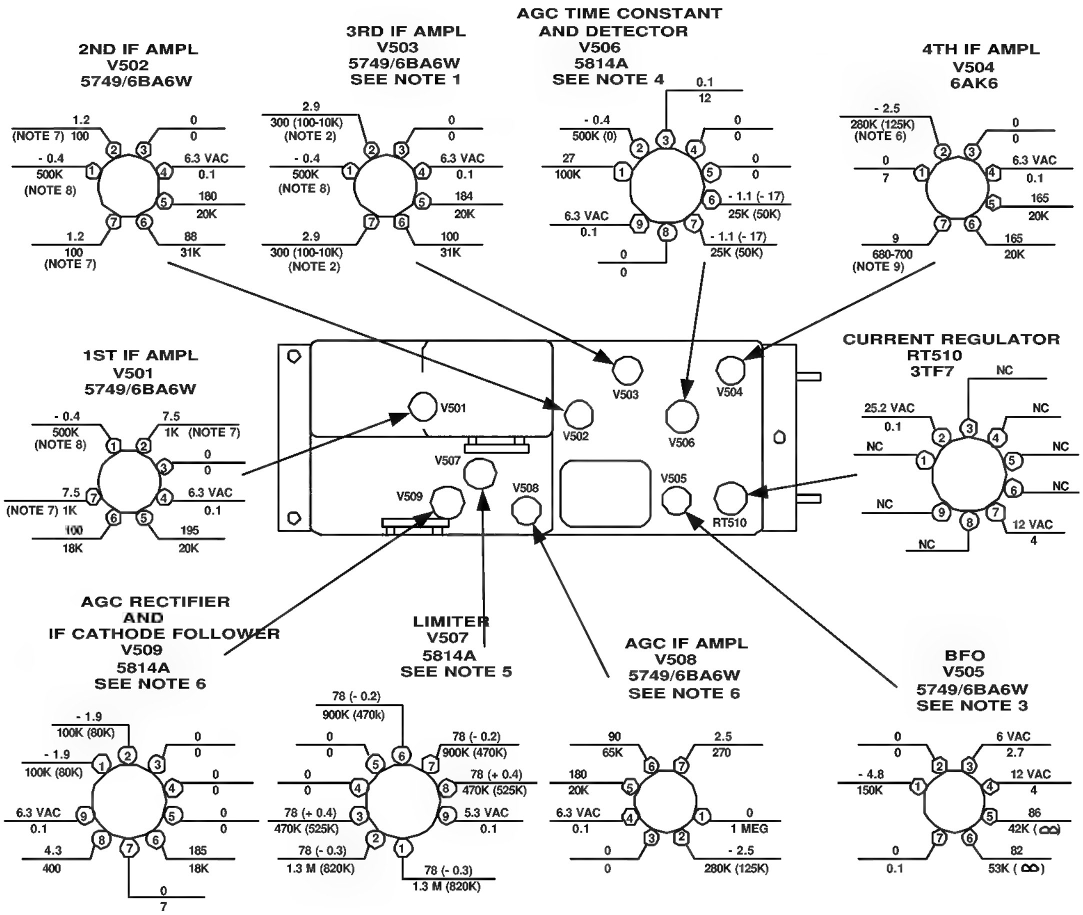

NOTES:

1. VOLTAGE AND RESISTANCE READINGS ON V503 ARE WITH A NORMAL SETTING OF THE **GAIN ADJ** CONTROL R519 MINIMUM (CLOCKWISE) AND MAXIMUM (COUNTER-CLOCKWISE) SETTINGS CHANGE VOLTAGE READINGS AS FOLLOWS:

R519	PIN NO. 2	5	6	7
MIN:	19	196	144	19
MAX:	1.3	178	85	1.3

2. RESISTANCE VALUES IN ( ) INDICATE RANGE OF READINGS DEPENDING UPON SETTING OF R519.

3. SET **BFO** SWITCH TO **ON** POSITION. RESISTANCE VALUES OF PINS 5 AND 6 IN ( ) ARE TAKEN WITH **BFO** SWITCH IN **OFF** POSITION.

4. RESISTANCE READINGS OF PIN 2 IN ( ) TAKEN WITH **FUNCTION** SWITCH SET TO **MGC**. VALUES OF PINS 6 AND 7 IN ( ) TAKEN WITH **LIMITER** CONTROL SET TO **10**.

5. VALUES IN ( ) TAKEN WITH **LIMITER** CONTROL SET TO **10**.

6. RESISTANCE VALUES IN ( ) TAKEN WITH **FUNCTION** SWITCH SET TO **MGC**.

7. **RF GAIN** CONTROL COMPLETELY CLOCKWISE.

8. **FUNCTION** SWITCH IN **AGC** POSITION.

9. RESISTANCE OF PIN 7 VARIES WITH SETTING OF **CARR METER ADJ** CONTROL R523.

Rev: 4/4/2K

DWG BY KH6GRT

Figure 5-6 IF Sub-chassis, Voltage and Resistance Diagram[6]

[6] Courtesy of Pete Wokoun, KH6GRT

5.5.3.1 Check the dc voltage at test points E209, E210, E211, and E402 with Electronic Multimeter USM-116( ). The voltage should be as follows:

TEST POINT	VOLTAGE
*E209	-4.0 to -6.8
E210	-3.0 to -8.0
E211	-1.3 to -4.3 (-0.95 to -1.6 with FC-7)
E402	-4 to -11

*To obtain a meter indication at test point E209, the receiver must be tuned below 8 MHz.

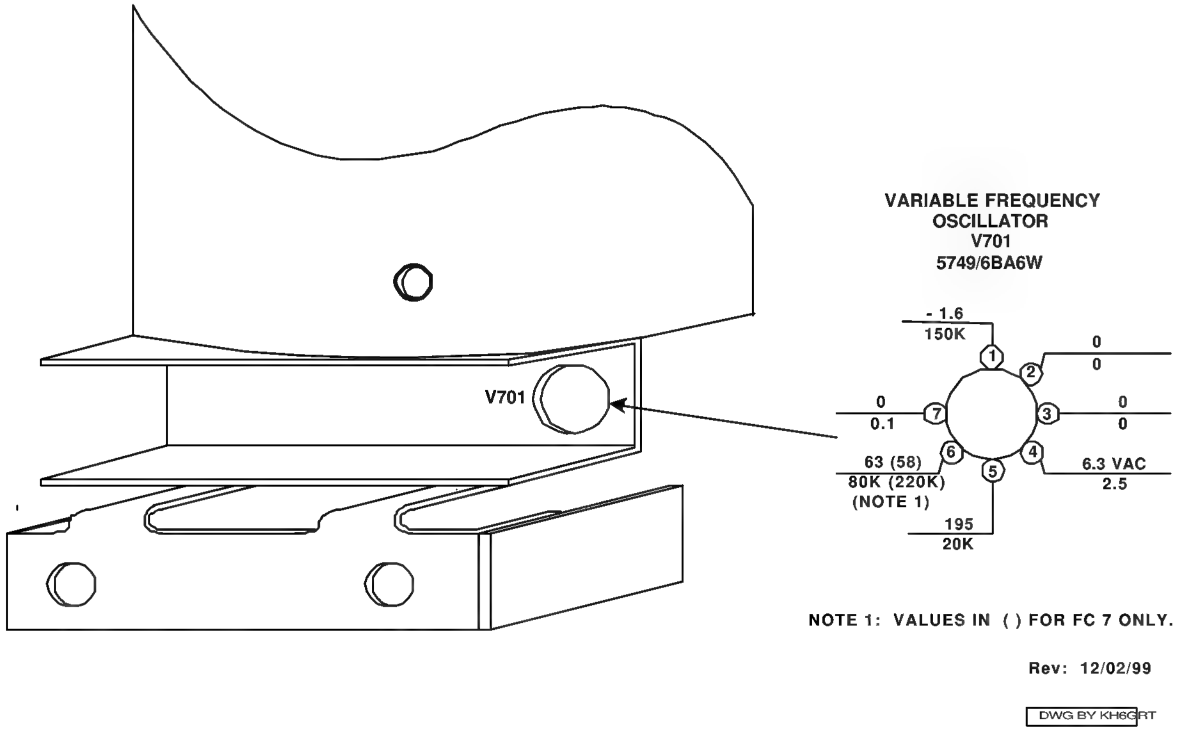

Figure 5-7 VFO Sub-chassis. Voltage and Resistance Diagram[7]

[7] Courtesy of Pete Wokoun, KH6GRT

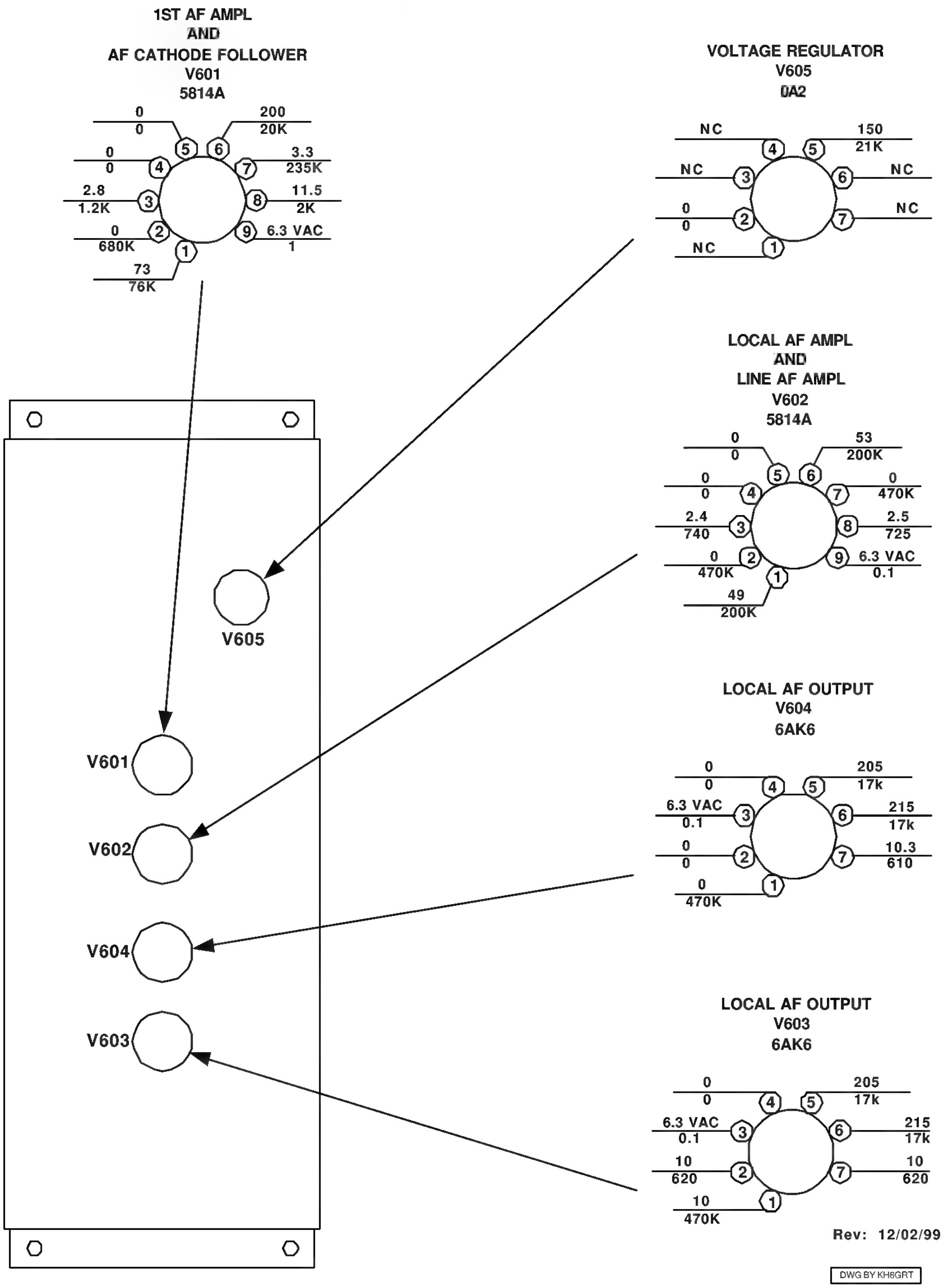

Figure 5-8 AF Sub-chassis, Voltage and Resistance Diagram[8]

[8] Courtesy of Pete Wokoun, KH6GRT

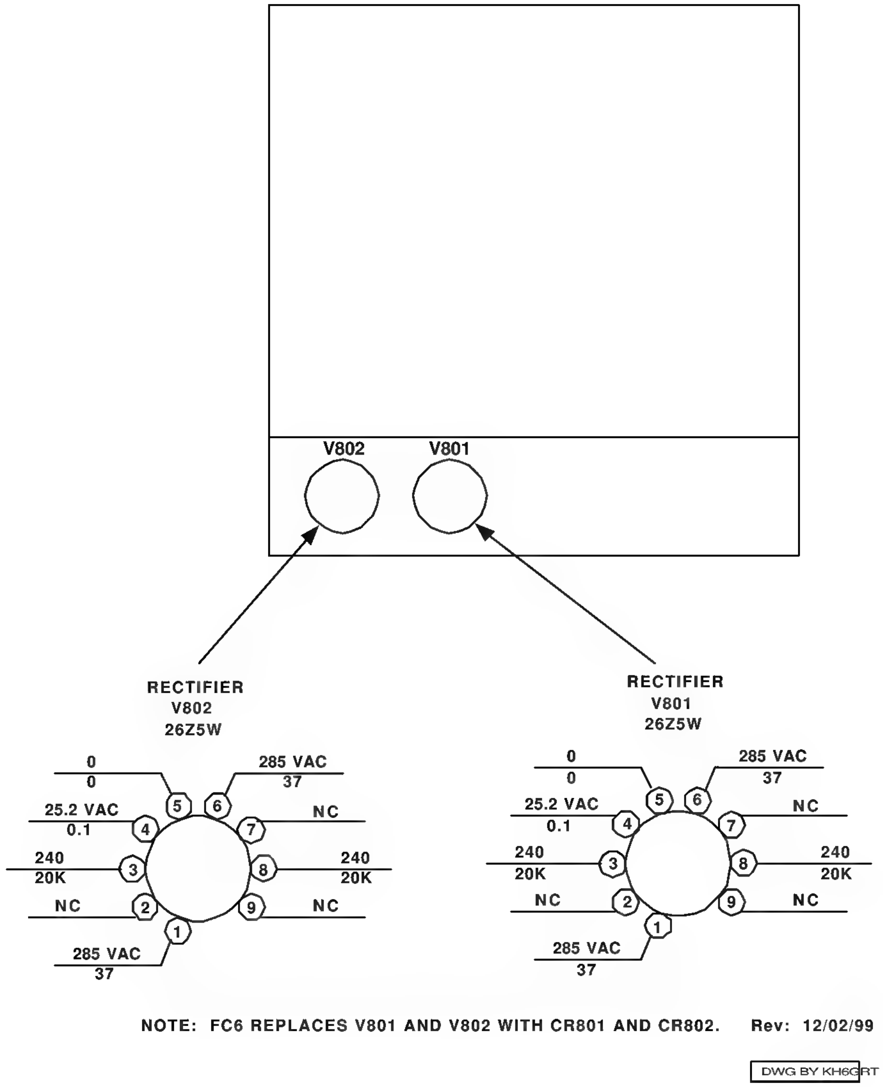

Figure 5-9 Power Supply Sub-chassis, Voltage and Resistance Diagram[9]

[9] Courtesy of Pete Wokoun, KH6GRT

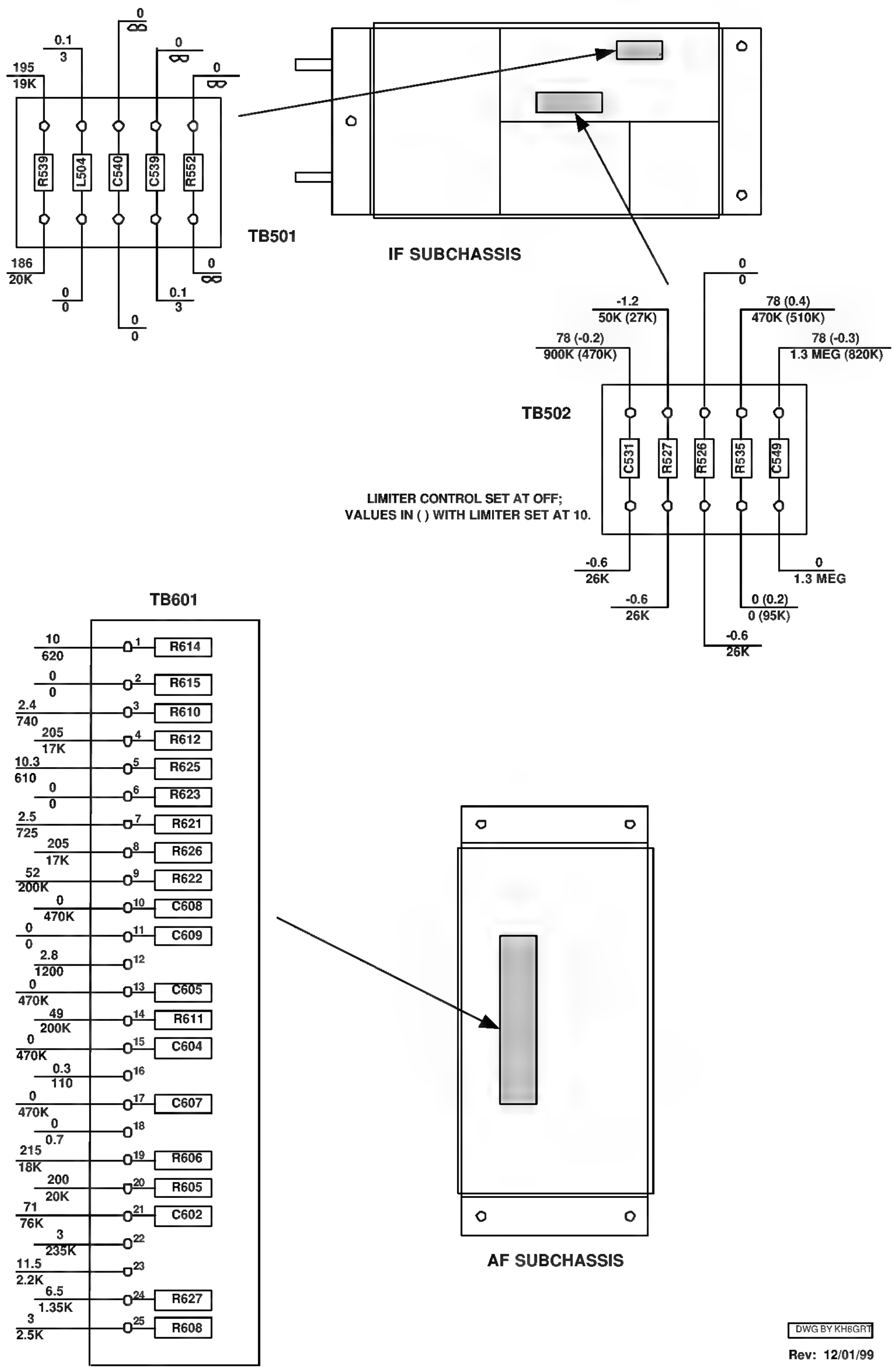

Figure 5-10 IF and AF Sub-chassis Resistor and Capacitor Terminal Boards, Voltage and Resistance Diagram[10]

[10] Courtesy of Pete Wokoun, KH6GRT

5.5.4 Receiver RF - IF Gain Test. The receiver RF - IF gain test checks receiver operation from the antenna through detector V506B. If the result of this test is normal, the fault is in the audio portion of the receiver.

1. Connect Multimeter AN/PSM-4( ) to the DIODE LOAD test jack on the front panel of the receiver and set meter controls for measuring -10 Vdc.

2. Connect Signal Generator AN/URM-25( ) to UNBALANCED ANT WHIP jack J103 on the back of receiver and set the controls for a cw output of 10 microvolts. (J104 must have short inserted.)

3. Tune Signal Generator AN/URM-25( ) and the receiver to the same frequency. Readjust the KILOCYCLE CHANGE control slightly for a maximum indication on the AN/PSM-4( ). Peak ANT TRIM control.

4. Adjust the output of the AN/URM-25( ) for a meter indication of -7 volts, If the AN/URM-25( ) output is between 1 and 4 microvolts, the RF - IF gain of the receiver is normal.

5. If the AN/URM-25( ) output is above or below the limits set in 4 above, readjust the AN/URM-25( ) output for 2 microvolts. Adjust GAIN ADJ control R519 (figure 6-16) for a meter indication of -7 volts. If this adjustment fails to restore normal operation, perform detailed checks of the IF and RF stages beginning with step 8 of table 5-5.

5.5.5 Trouble Isolation Table. The procedures in table 5-5 can be used to rapidly localize trouble to a particular stage. Preset the receiver front-panel controls as directed in paragraph 5.5.2. Use tube adapters to make connections where test jacks are not provided. Refer to figures 5-11 and 5-12 through 5-15.

Table 5-5 Trouble Isolation

STEP NO.	TEST INSTRUCTIONS	SIG GEN OUTPUT CONTROL	NORMAL INDICATION	INSTRUCTIONS
1	Connect positive lead of Multimeter AN/PSM-4( ) to F102 terminal and negative lead to ground.	N/A	240 Vdc	1.If indication is correct, proceed to next step. 2.If indication is incorrect, check ac input circuit and power supply subchassis (figure 5-11).
2	Connect positive lead of Multimeter AN/PSM-4( ) to F103 terminal and negative lead to ground.	N/A	205 Vdc	1. If indication is correct, proceed to next step. 2.If indication is incorrect, check filter circuits in AF subchassis (figure 5-11).

STEP NO.	TEST INSTRUCTIONS	SIG GEN OUTPUT CONTROL	NORMAL INDICATION	INSTRUCTIONS
3	Connect positive lead of Multimeter AN/PSM-4( ) to test point E607 on AF sub-chassis.	N/A	+150 Vdc	1.If indication is correct, power supply circuits are normal. Proceed with next step. 2.If indication is incorrect, check voltage regulator V605 circuit (figure 5-11).
4	Connect Signal Generator AN/URM-25( ) to pin 7 grid of V506. Set CARRIER LEVEL to 10 in CW mode and then set controls for an output of 455 kHz with 30% 400 Hz modulation. Set LINE METER switch to -10 and LINE GAIN control to 10.	0. 1V	-10 vu min	1. If indication is correct, proceed to step 5. 2.If indication is incorrect, proceed to step 6.
5	With the signal generator set up as in step 1, connect Electronic Multimeter ME-6 D/U to PHONES jack J102 on the front panel,	0. 1V .	-20 dB min	1.If the multimeter reading is at least -20 dB, proceed to step 8. 2.If reading is incorrect, proceed to step 7.
6	Connect Audio Signal Generator AN/URM-127 to the following points and adjust its output to the given setting. Set the frequency to 800 Hz. Set LINE METER switch to 0. Set LINE GAIN control to 10. Pin 1 Grid V604 Pin 7 Grid V602B Pin 7 Grid V601B Pin 2 Grid V601A Pin 7 Grid V507	 5.0V 0.2V 0.6V 0.04V 0.15V	 0 vu min 0 vu min 0 vu min 0 vu min 0 vu min	1.Continue from stage to stage until an incorrect indication is obtained. The last circuit checked is defective or if all indications are correct, the trouble lies in detector circuit V506B (figure 5-14).

STEP NO.	TEST INSTRUCTIONS	SIG GEN OUTPUT CONTROL	NORMAL INDICATION	INSTRUCTIONS
7	Connect Electronic Multimeter ME-6 D/U to PHONES jack J102 and Audio Signal Generator AN/URM-127 to the following points and adjust its output to the given setting. Set the frequency to 800 Hz. Pin 1 Grid V603 Pin 2 Grid V602A Pin 7 Grid V601B	 1.1V 0.15V 0.4V	 0 dB min 0 dB min 0 dB min	1.Continue from stage to stage until an incorrect indication is obtained. The last circuit checked is defective.
8	Set Signal Generator AN/URM-25( ) for an output of 455 kHz with 30% 400 Hz modulation and connect it to test point E211. Set LINE METER to 0 and LINE GAIN to 9.	10 uV	0 vu min	1.If indication is correct, proceed to step 10. 2.If indication is incorrect, proceed to next step.
9	With the signal generator setup as in step 8, connect to the following points in turn. Pin 1 Grid V504 Set LINE METER (LM) to -10 and LINE GAIN (LG) to 10 Pin 1 Grid V503 Set LM to -10, LG to 8 Pin 1 Grid V502 Set LM to -10, LG to 9 Pin 1 Grid V501 Set LM to -10, LG to 9	 0. 01V 0. 001V 100 uV 10 uV	 0 vu min 0 vu min 0 vu min 0 vu min	1. Continue from stage to stage until an incorrect indication is obtained. The last circuit checked is defective. 2. If all indications are correct, proceed to next step.
10	Change the signal generator frequency to 3 MHz, check carrier level and % Mod, and connect to test point E211. Tune the receiver KILOCYCLE CHANGE control above 900 on the counter dial to a peak indication on the LEVEL METER. Set LM to -10, LG to 9.	10 uV	0 vu min	1. If indication is correct, proceed to next step. 2. If indication is not correct, the trouble probably is in the circuit of V701. See paragraph 5.5.3.

STEP NO.	TEST INSTRUCTIONS	SIG GEN OUTPUT CONTROL	NORMAL INDICATION	INSTRUCTIONS
11	Connect the signal generator to test point E210 with the frequency still at 3 MHz. Set LM to -10, LG to 9.	10 uV	0 vu min	1. If indication is correct, proceed to next step. 2. f indication is not correct the circuit of V203 is faulty.
12	With the signal generator connected to test point E210 change the signal generator frequency to 13 MHz. Tune the MEGACYCLE CHANGE control to 13 MHz and adjust the KILOCYCLE CHANGE control for a peak indication on the LEVEL METER. Rotate the MEGACYCLE CHANGE control from 14 thru 31 MHz. Set LM to +10, LG to 10.	0. 001V	0 vu min	1. If indication is correct, the fault is probably in the 2nd crystal oscillator circuit V401. See paragraph 5.5.3 and figure 3-3.
13	Connect the signal generator to E209 and tune both the receiver and signal generator to 1 MHz peaking the LEVEL METER indication with the KILOCYCLE CHANGE control. Set LM to 0, LG to 9.	0.01V	0 vu min	1. If indication is correct, proceed to step 15. 2. If indication is incorrect, proceed to next step.
14	Change the signal generator frequency to 18 MHz and adjust for a peak on the LEVEL METER. Set LM to 0,LG to 8.	0. 001V	0 vu min	1. If indication is correct the faulty circuit is probably the 1st crystal oscillator V207. See paragraph 5.5.3. 2. If indication is incorrect, check the 1st mixer circuit V202.

STEP NO.	TEST INSTRUCTIONS	SIG GEN OUTPUT CONTROL	NORMAL INDICATION	INSTRUCTIONS
15	Connect the signal generator to E208 and tune the frequency of the receiver and signal generator to 0.5 MHz adjusting the KILOCYCLE CHANGE control for a peak indication on the LEVEL METER. Check at 15 MHz and 31 MHz also. Set LM to 0, LG to 8.	0.5MHz 10 uV 15 MHz 10 uV 31 MHz 10 uV	0 vu min	1. If indication is correct, proceed to next step. 2. If indication is incorrect, check the circuit of V201,
16	Connect the signal generator to J103 on back of receiver, Tune the receiver and signal generator to 15 MHz. Set LM to -10, LG to 10.	1 uV	0 vu min	1. If indication is correct, proceed to next step. 2. If indication is incorrect, check antenna input circuits.
17	Set FUNCTION switch to AGC position. With the signal generator connected as in previous step, observe indication of CARRIER LEVEL meter.	10 uV 100 uV	40 min 60 ± 2	1. If indication is normal, proceed to step 20. 2. If indication is abnormal, proceed to next step.
18	With the signal generator set up as in previous step, connect Oscilloscope AN/USM117( ) to IF OUTPUT jack on rear panel. Observe 455 kHz waveform.	100 uV	180 mV min	1. If indication is normal, proceed with next step. 2. If indication is abnormal, check the circuit of V509B.
19	Disconnect oscilloscope, and connect Multimeter AN/PSM4( ) to TB102-3. Observe indication.	100 uV 10 mV	-4.0 Vdc min -1.4 Vdc min	1. If indication is normal, trouble is in circuit of V506A. 2. If indication is abnormal, trouble is in circuits of V508 or V509A.

STEP NO.	TEST INSTRUCTIONS	SIG GEN OUTPUT CONTROL	NORMAL INDICATION	INSTRUCTIONS
20	Disconnect signal generator. Set FUNCTION switch to CALIBRATE position and BFO switch to ON. Turn RF GAIN to 10, and tune receiver to a multiple of 100 kHz. Adjust ANT TRIM for max indication on CARRIER LEVEL meter.	N/A	40 dB min	1. If indication is normal, the receiver is operating properly. 2. If indication is abnormal, proceed to next step.
21	Connect Oscilloscope AN/USM-117( ) to pin 7 grid of V205B and observe 100 kHz waveform.	N/A	54V p-p min	1. If indication is normal, check circuit of V205B. 2. If indication is abnormal, proceed to next step.
22	Remove V206 from its socket and connect oscilloscope to pin 2 grid of V206 socket. Observe 200 kHz waveform.	N/A	13.5V p-p min	1. If indication is normal, check circuit of V206. 2. If indication is abnormal, check circuit of V205A.

5.5.6 DC Resistances of Transformers and Coils. The dc resistances of the windings of the transformers and coils in Radio Receiver R-390A/URR as measured with Multimeter AN/PSM-4( ) are listed in table 5-6.

Table 5-6 Transformer and Coil Resistances

MAIN FRAME		
TRANSFORMER OR COIL	**TERMINALS**	**OHMS**
FL101	A-A B-B	Less than 0.1 Less than 0.1
K101	1-2	200

R-F SUBCHASSIS		
TRANSFORMER OR COIL	**TERMINALS**	**OHMS**
HR202	1-3	5
L201	1-3	7
L202	1-3	0.6
L203	1-3	0.6
L204	1-3	0.6
L205	1-3	0.6
L206	1-3	0.6
L207	1-3	0.6
L208	1-3	7
L210	1-3	0.15
L211	1-3	7
L236	1-3	0.3
T201	1-2 4-6	Less than 0.2 2.7
T202	1-2 4-6	Less than 0.2 1.2
T204	1-2 4-6	Less than 0.2 4
T205	1-2 4-6	Less than 0.2 Less than 0.2
T206	1-2 4-6	Less than 0.2 Less than 0.2

R-F SUBCHASSIS		
TRANSFORMER OR COIL	**TERMINALS**	**OHMS**
T207	1-2 3-4	Less than 0.2 Less than 0.2
T208	1-5 2-3 3-4 2-4	2.5 2 2 4
Z201-1	1-3	2.8
Z202-1	1-3	1.8
Z203-1	1-3	1.2
Z204-1	1-3	0.5
Z205-1	1-3	0.2
Z206-1	1-3	Less than 0.2
Z201-2	1-3	2.8
Z202-2	1-3	1.8
Z203-2	1-3	1.2
Z204-2	1-3	0.5
Z205-2	1-3	0.2
Z206-1	1-3	Less than 0.2
Z201-2	1-3	2.8
Z202-2	1-3	1.8
Z203-2	1-3	1.2
Z204-2	1-3	0.5
Z205-2	1-3	0.2
Z206-2	1-3	Less than 0.2
Z213-1	1-3	Less than 0.2
Z213-2	1-3	Less than 0.2
Z213-3	1-3	Less than 0.2
Z216-1	1-3	1.1
Z216-2	1-3	1.1
Z213-1	1-3	Less than 0.2
Z213-2	1-3	Less than 0.2
Z213-3	1-3	Less than 0.2
Z216-1	1-3	1.1
Z216-2	1-3	1.1
Z216-3	1-3	1.1

IF SUBCHASSIS		
TRANSFORMER OR COIL	TERMINALS	OHMS
FL502	1-2 3-4	40 40
FL503	1-2 3-4	40 40
FL504	1-2 3-4	40 40
FL505	1-2 3-4	40 40
L501		7
L502		90
L504		3
L505		90
RT510	2-7	8
T501	1-2 4-5	6 6
T502	1-2 4-5	6 6
T503	1-2 3-4 4-5 3-5	6 6.1 6.3 0.2
Z501	1-2	4.8
Z502	1-2 1-3 2-3	0.2 1.8 1.6
Z503	1-5	18

CRYSTAL-OSCILLATOR SUBCHASSIS		
TRANSFORMER OR COIL	**TERMINALS**	**OHMS**
HR401	Gnd J410-E	11
L401		7
L402		0.6
T401	1-2 3-4	Less than .1 Less than 0.1

AF SUBCHASSIS		
TRANSFORMER OR COIL	**TERMINALS**	**OHMS**
FL601	1-2 2-3 1-3	230 250 480
K601	1-7	2.8
L601	1-2	130
L602	1-2	125
L603	1-2	110
RT510	2-7	8
T601	1-2 3-4 5-6	580 28 30
T602	1-2 3-4 5-6	580 28 30

VFO SUBCHASSIS		
TRANSFORMER OR COIL	**TERMINALS**	**OHMS**
L706		0.6
Z702	1-2 3-4	4 0.5

5.5.7 Resistance Measurements at Subchassis Connectors. Connectors are used in this receiver to interconnect the various subchassis. Defects may be localized by measurement of the resistance to ground at the receptacle terminals of a subchassis. The charts below indicate the normal resistance between the indicated receptacle terminals and chassis ground. To prepare the receiver for these measurements, disconnect the receiver from the power source and remove the connectors from the subchassis suspected to be faulty.

Table 5-7 - Connector Resistance Measurements

RF SUBCHASSIS	
Terminal of Receptacle J208	Resistance to Ground (ohms)
A	92k
B	0.8
C	Inf
D	Inf
E	Inf
F	100
H	0
J	Inf
K	Inf

CRYSTAL-OSCILLATOR SUBCHASSIS	
Terminal of Receptacle J410	Resistance to Ground (ohms)
A	Inf
B	10
C	Inf
D	0
E	11
F	11
H	0

IF SUBCHASSIS	
Terminal of Receptacle J512	Resistance to Ground (ohms)
1	Infinity (∞)
2	50k
3	54k
4	500k
5	Infinity (∞)
6	Infinity (∞)
7	Infinity (∞)
8	Infinity (∞)
9	Infinity (∞)
10	440k
11	Infinity (∞)
12	27
13	Infinity (∞)
14	0 to20
15	132k
16	100k
17	0
18	0
19	Infinity (∞)
20	0.5

AF SUBCHASSIS	
Terminal of Receptacle J619	Resistance of Ground (ohms)
1	3.6
2	90k
3	90k
4	90k
5	90k
6	Infinity (∞)
7	Infinity (∞)
8	Infinity (∞)
9	58
10	Less than 0.1
11	0
Terminal of Receptacle J620	Resistance to Ground (ohms)
1	Infinity (∞)
2	940k
3	Infinity (∞)
4	470k
5	200
6	Infinity (∞)
7	200
8	Infinity (∞)
9	Infinity (∞)
10	Infinity (∞)
11	Infinity (∞)
12	Infinity (∞)
13	0
14	1.35M
15	Infinity (∞)

VFO SUBCHASSIS	
Terminal of Receptacle J709	Resistance to Ground
A	Infinity (∞)
B	Infinity (∞)
C	Infinity (∞)
D	Infinity (∞)
E	Infinity (∞)
F	0
H	3.5
J	Infinity (∞)
K	Infinity (∞)

POWER SUPPLY SUBCHASSIS	
Terminal of Receptacle J811	Resistance to Ground
1	Less than 0.1
2	0
3	Infinity (∞)
4	Infinity (∞)
5	Infinity (∞)
6	Infinity (∞)
7	Infinity (∞)
8	Infinity (∞)
9	Infinity (∞)
10	Less than 0. 1
11	0

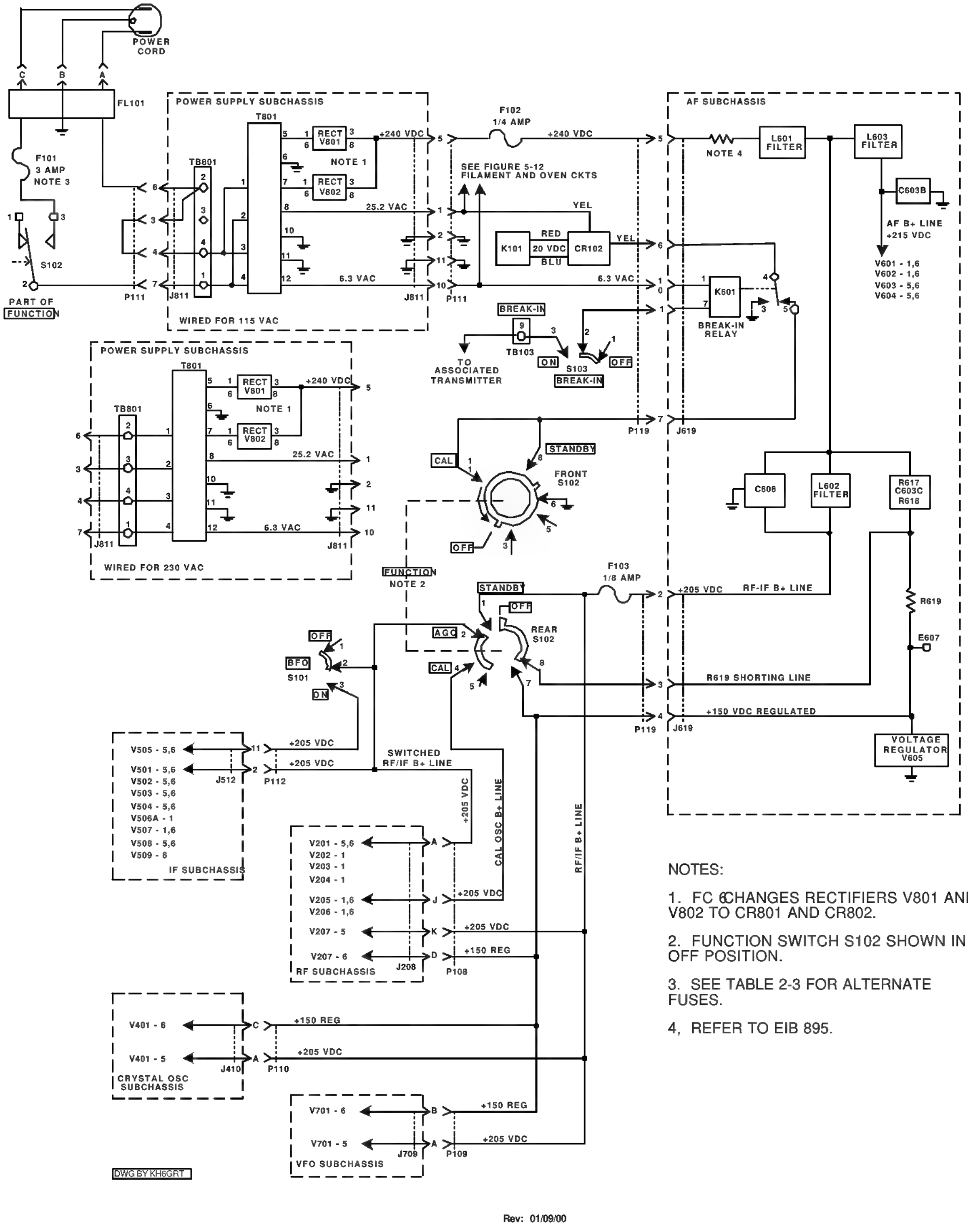

NOTES:

1. FC 6CHANGES RECTIFIERS V801 AND V802 TO CR801 AND CR802.

2. FUNCTION SWITCH S102 SHOWN IN OFF POSITION.

3. SEE TABLE 2-3 FOR ALTERNATE FUSES.

4, REFER TO EIB 895.

Figure 5-11 Power Distribution Diagram[11]

[11] Courtesy of Pete Wokoun, KH6GRT

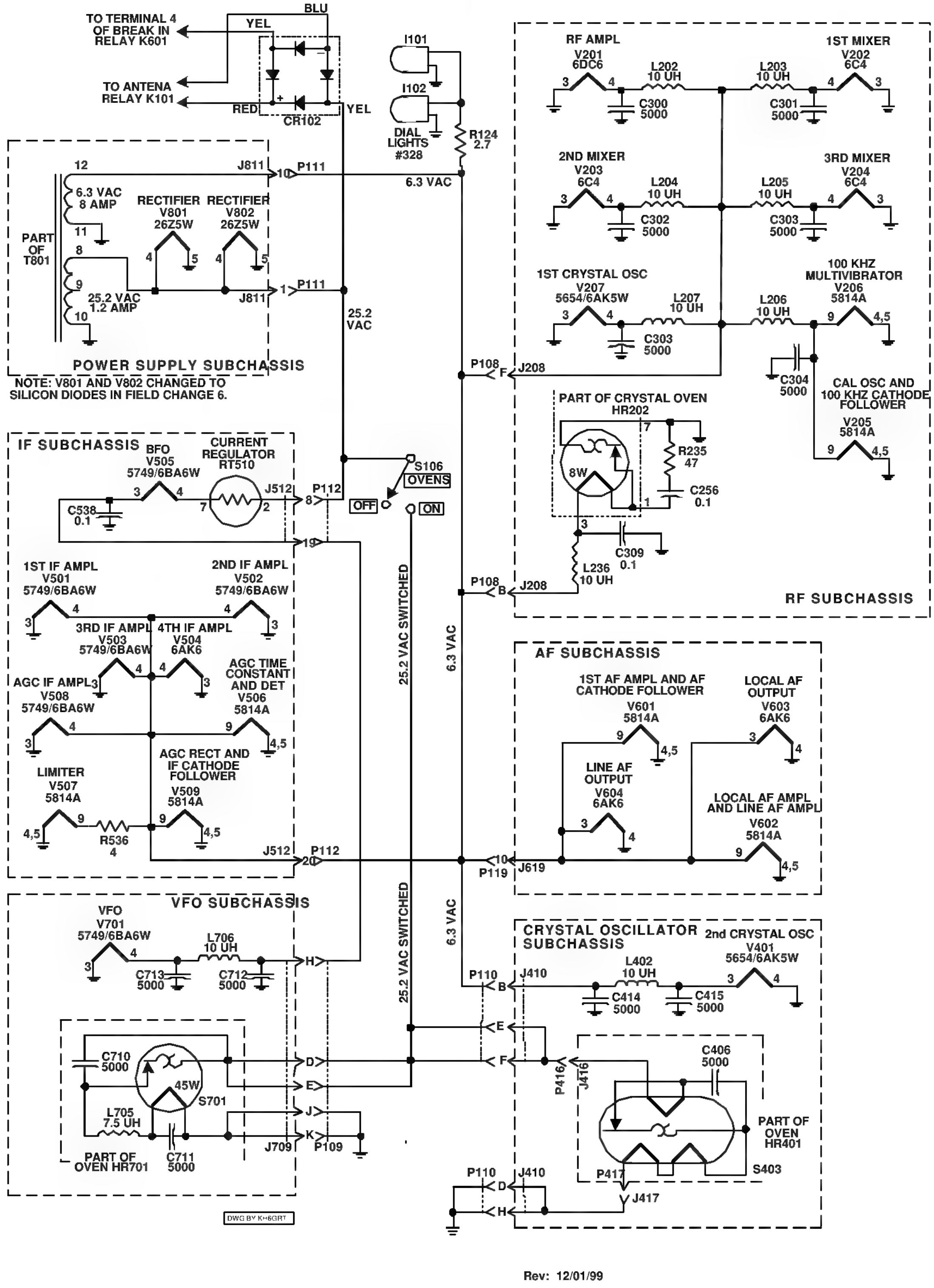

Figure 5-12 Filament and Oven Circuits[12]

[12] Courtesy of Pete Wokoun, KH6GRT

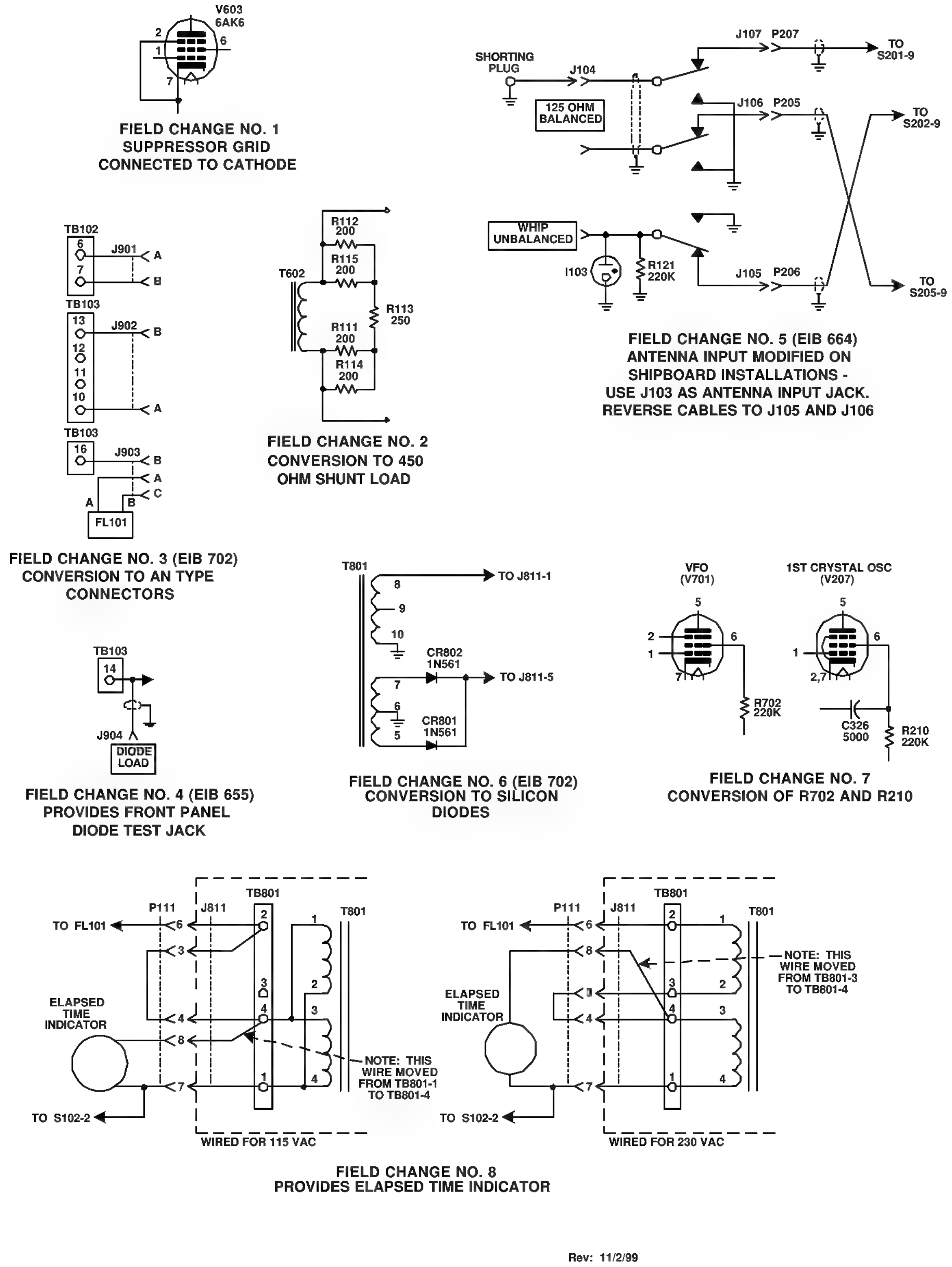

Figure 5-13 Field Changes[13]

[13] Courtesy of Pete Wokoun, KH6GRT

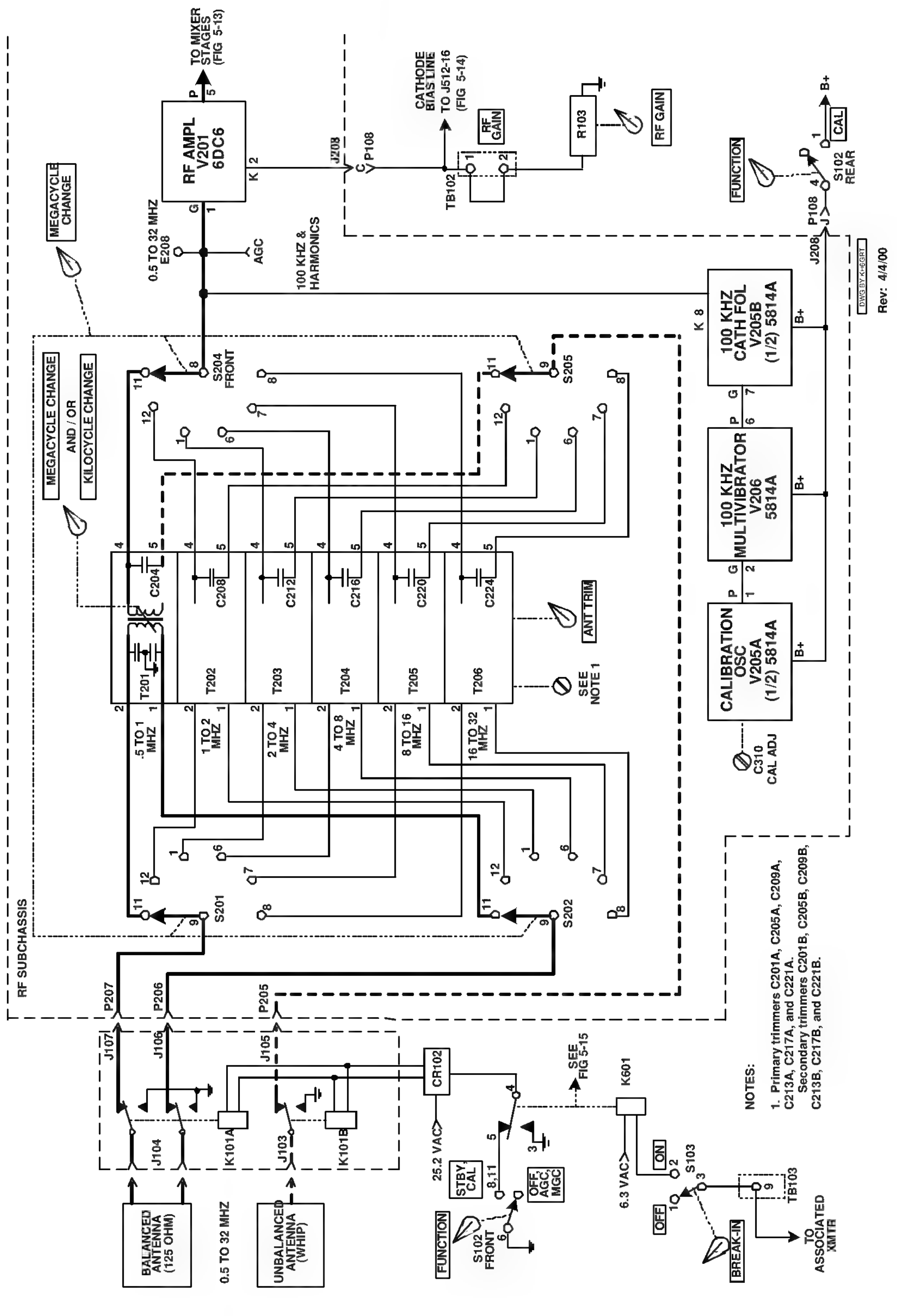

Figure 5-14 Signal Flow Diagram, Part 1 of 4 - RF Stage[14]

[14] Courtesy of Pete Wokoun, KH6GRT

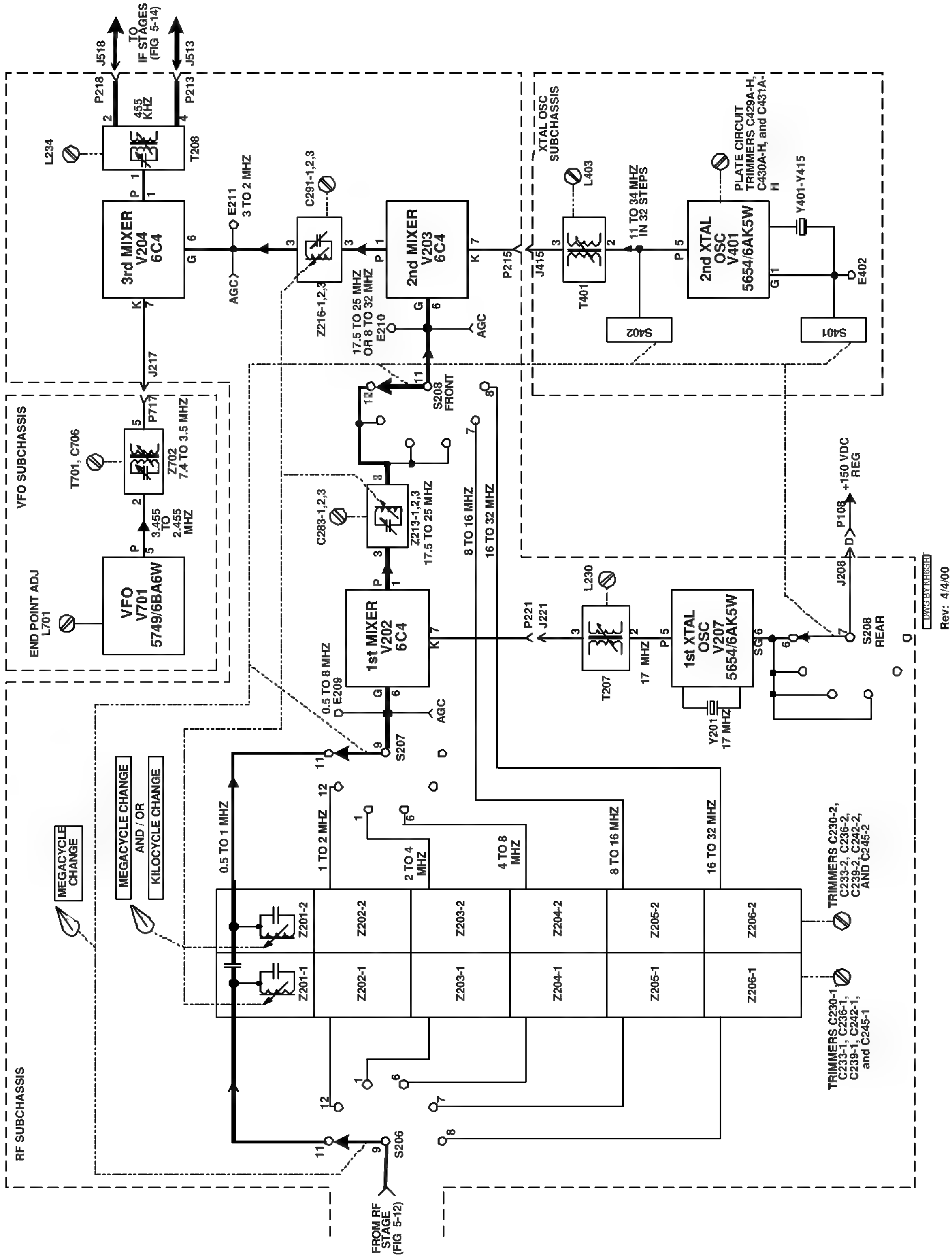

Figure 5-15 Signal Flow Diagram, Part 2 of 4 - Mixer Stages[15]

[15] Courtesy of Pete Wokoun, KH6GRT

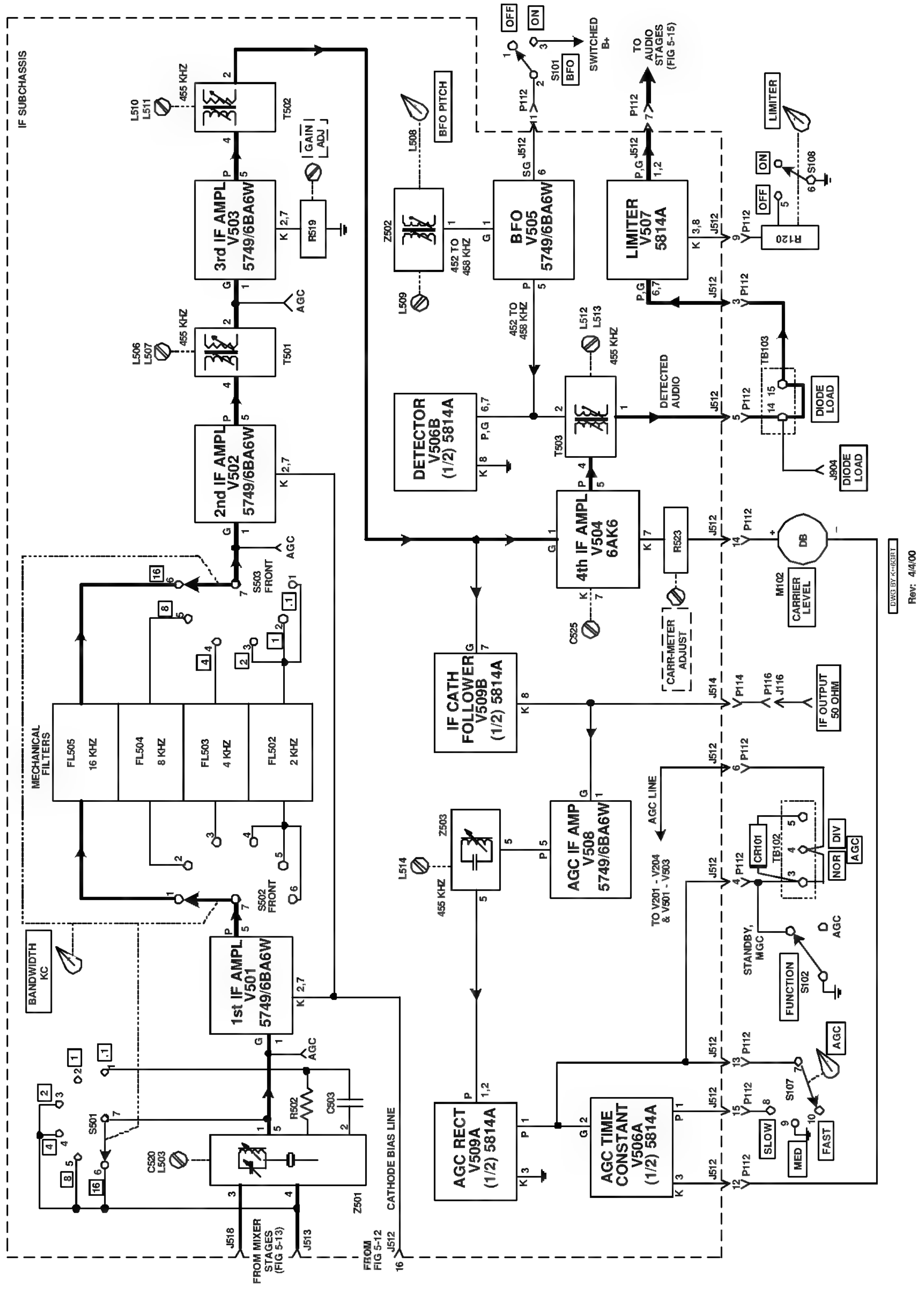

Figure 5-16 Signal Flow Diagram, Part 3 of 4 - IF Stages[16]

[16] Courtesy of Pete Wokoun, KH6GRT

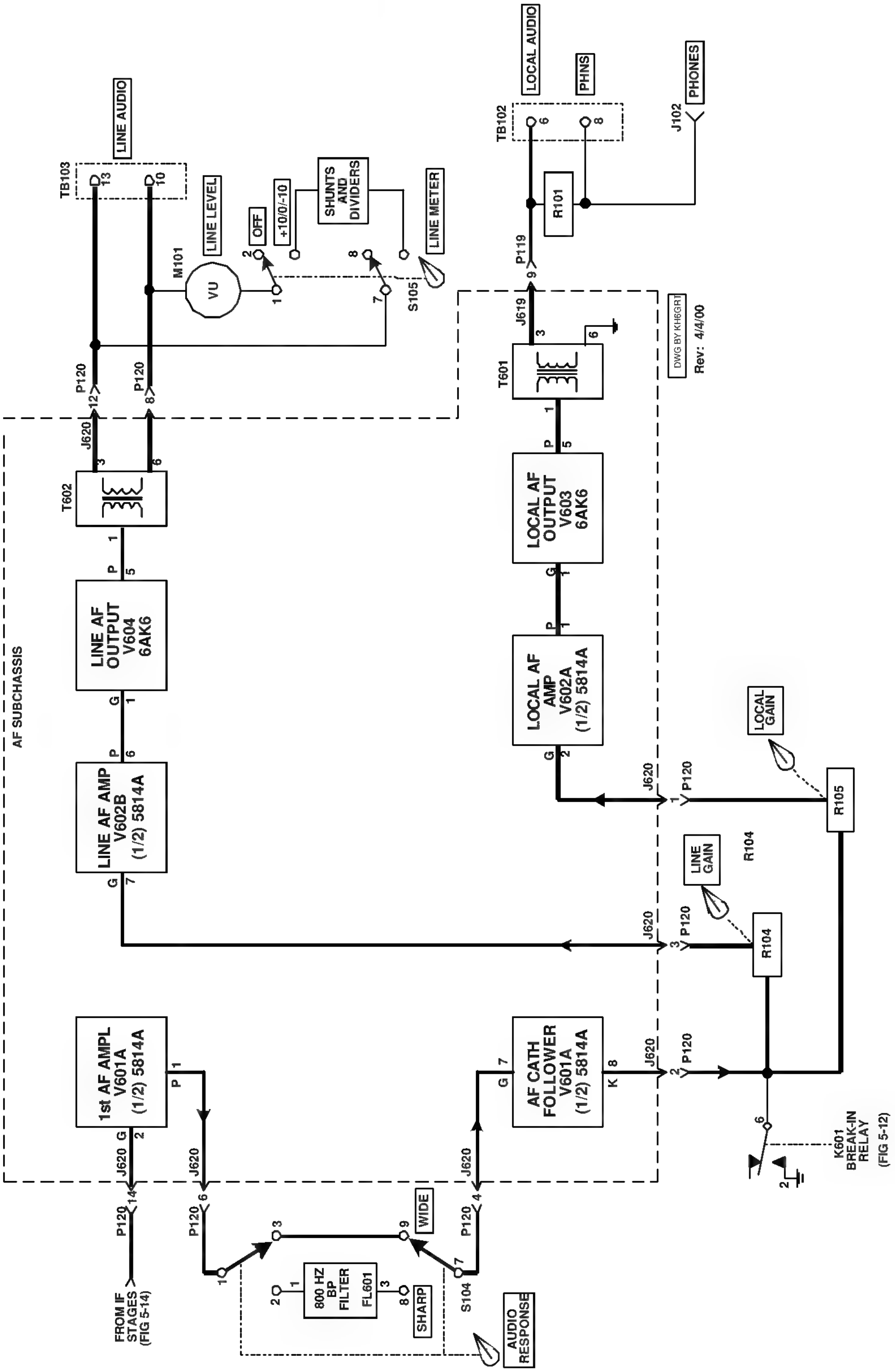

Figure 5-17 Signal Flow Diagram, Part 4 of 4 - Audio Stages[17]

[17] Courtesy of Pete Wokoun, KH6GRT

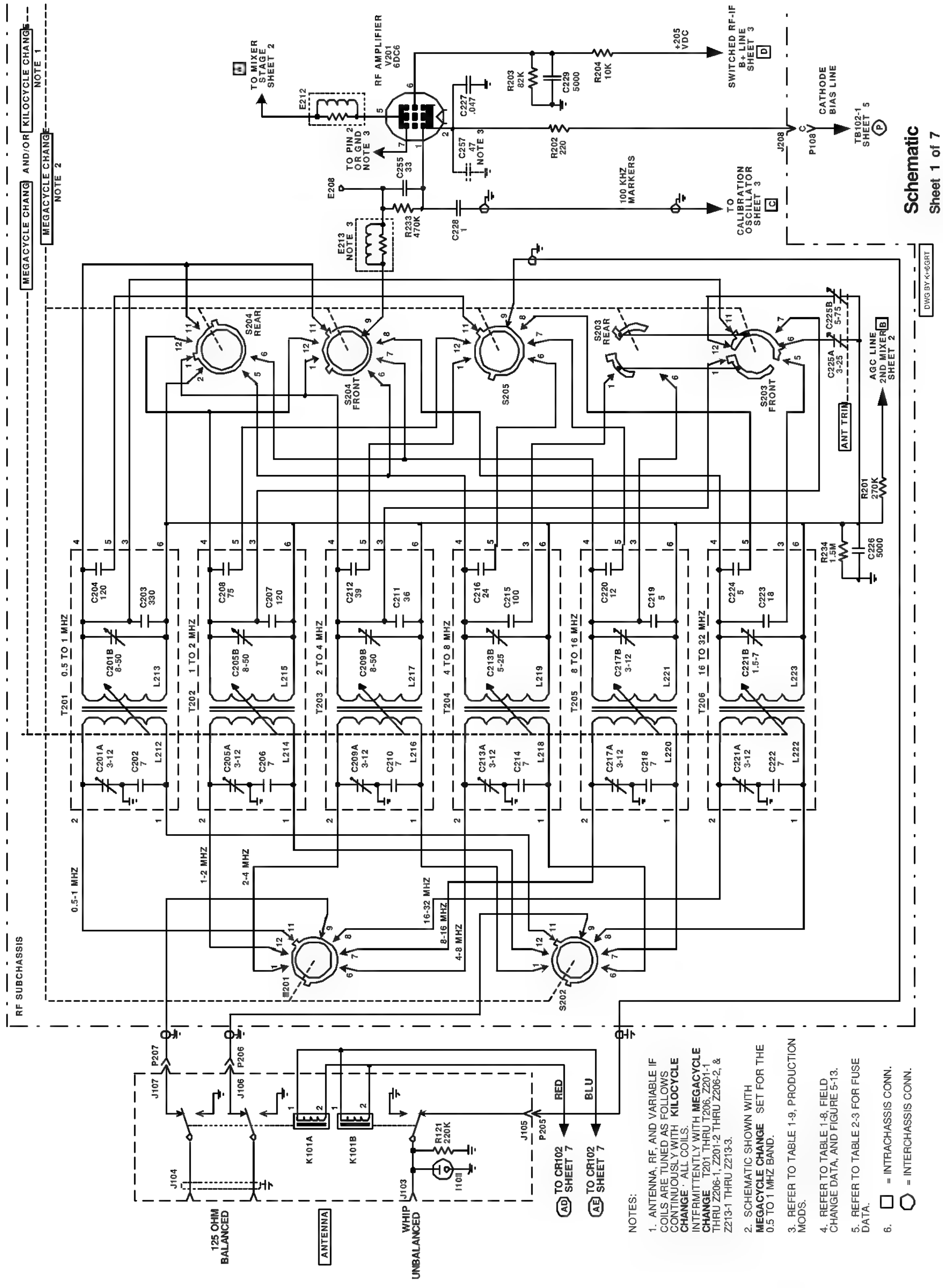

Figure 5-18 Schematic Diagram, Part 1 of 7 - RF Amplifier[18]

[18] Courtesy of Pete Wokoun, KH6GRT

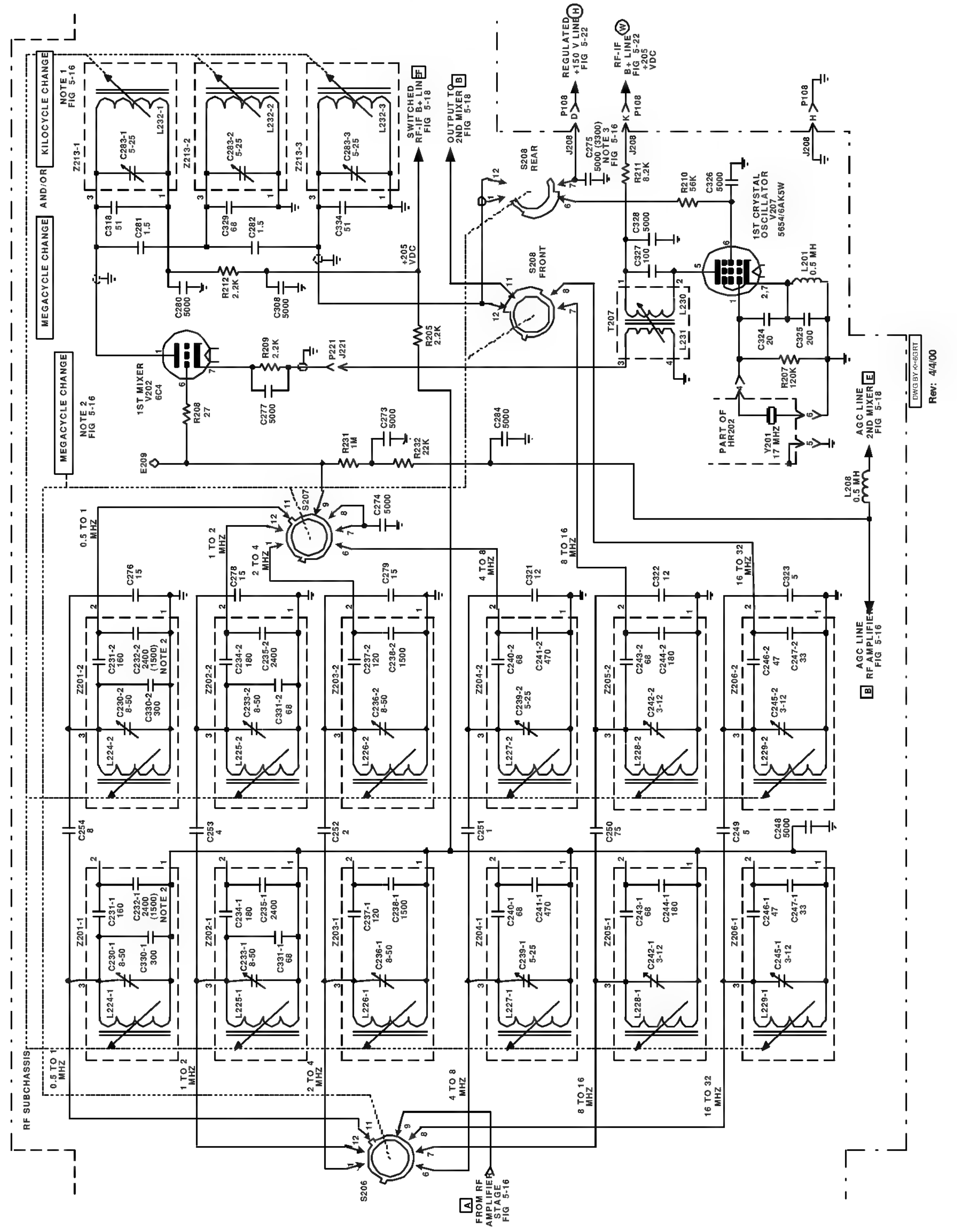

Figure 5-19 Schematic Diagram, Part 2 of 7 - 1st Mixer and 1st Crystal Oscillator[19]

[19] Courtesy of Pete Wokoun, KH6GRT

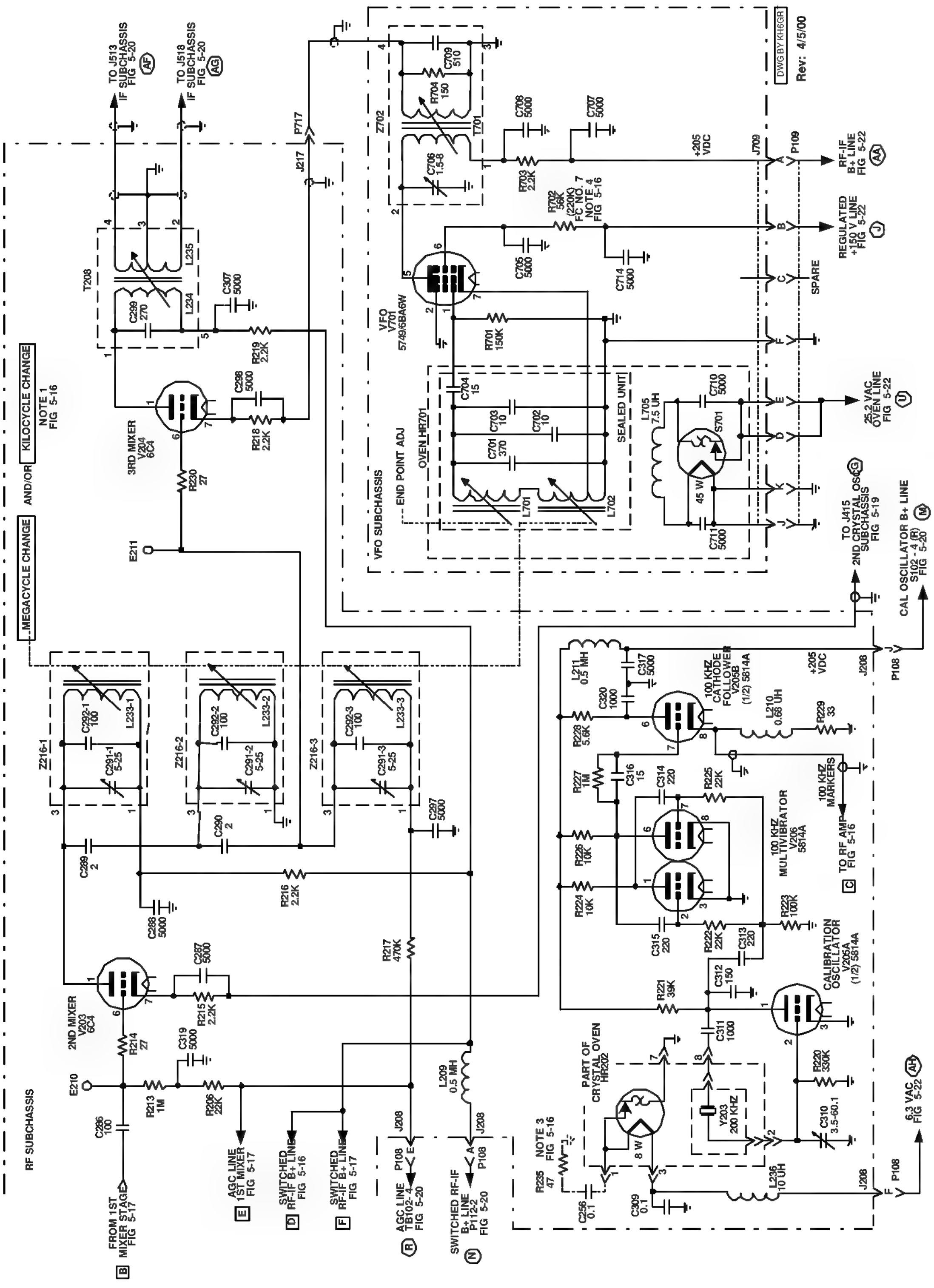

Figure 5-20 Schematic Diagram, Part 3 of 7 - 2nd Mixer and VFO[20]

[20] Courtesy of Pete Wokoun, KH6GRT

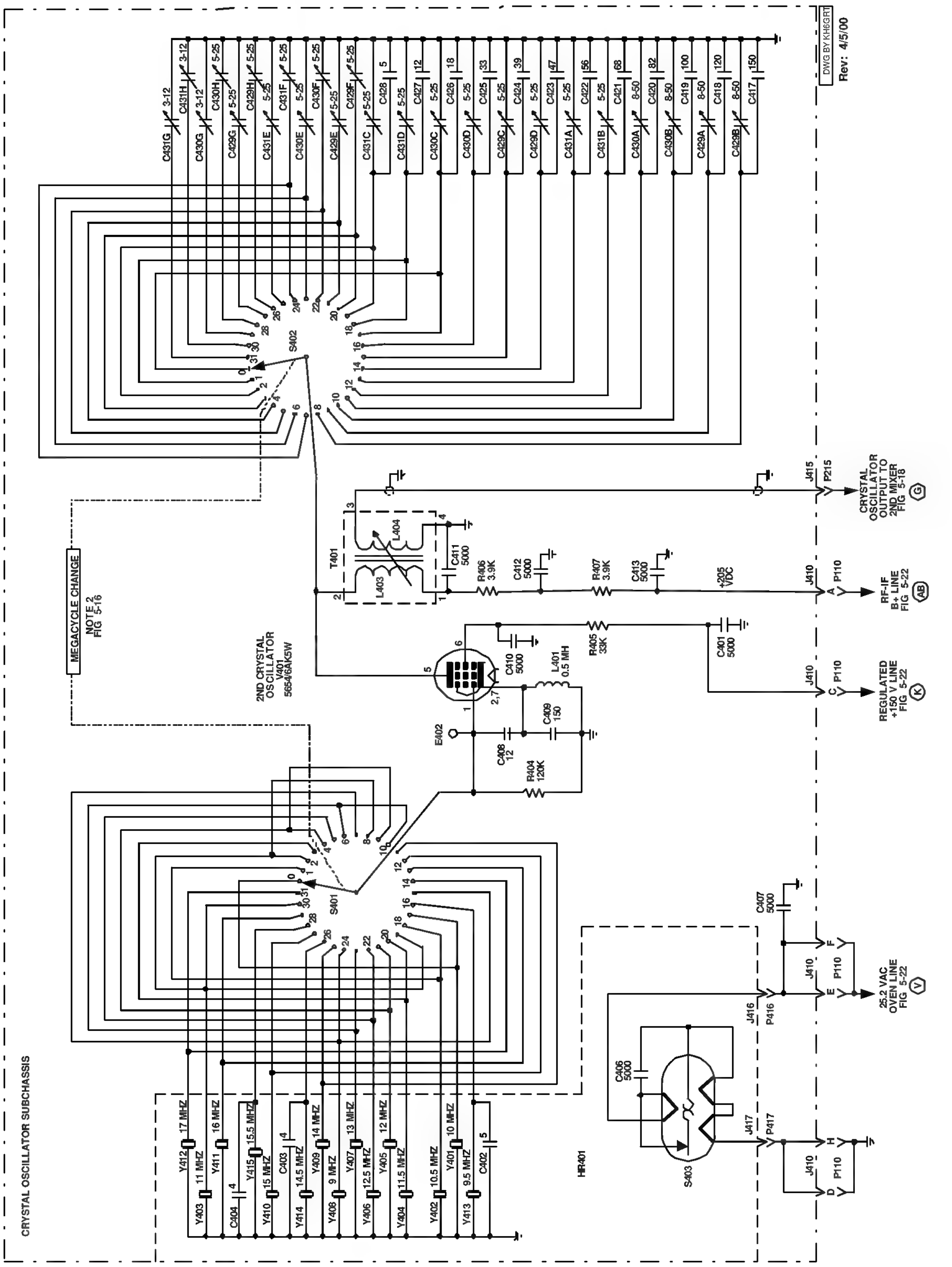

Figure 5-21 Schematic Diagram, Part 4 of 7 - 2nd Crystal Oscillator[21]

[21] Courtesy of Pete Wokoun, KH6GRT

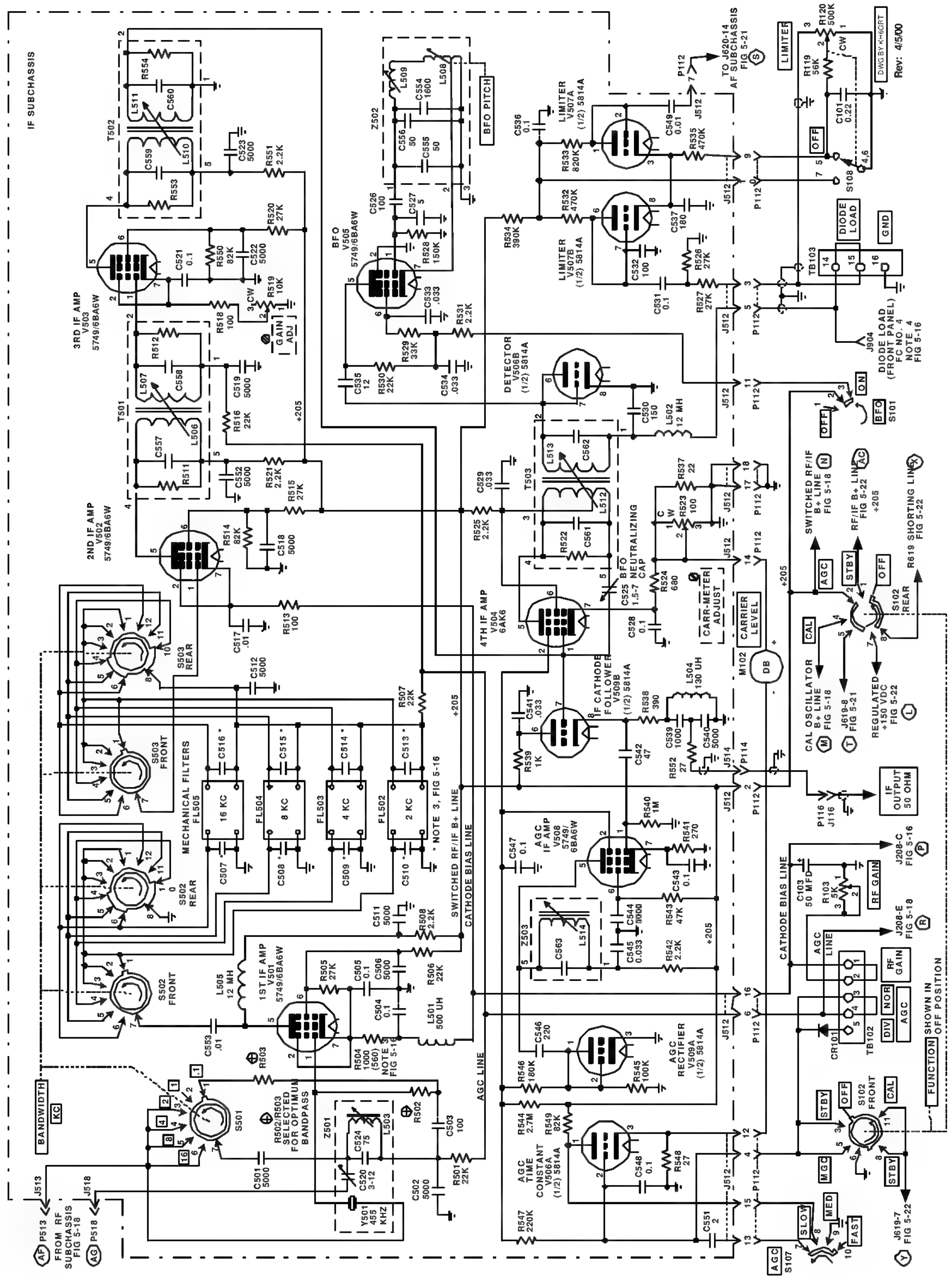

Figure 5-22 Schematic Diagram, Part 5 of 7 - IF Amplifiers, AGC, Limiter and Detector[22]

[22] Courtesy of Pete Wokoun, KH6GRT

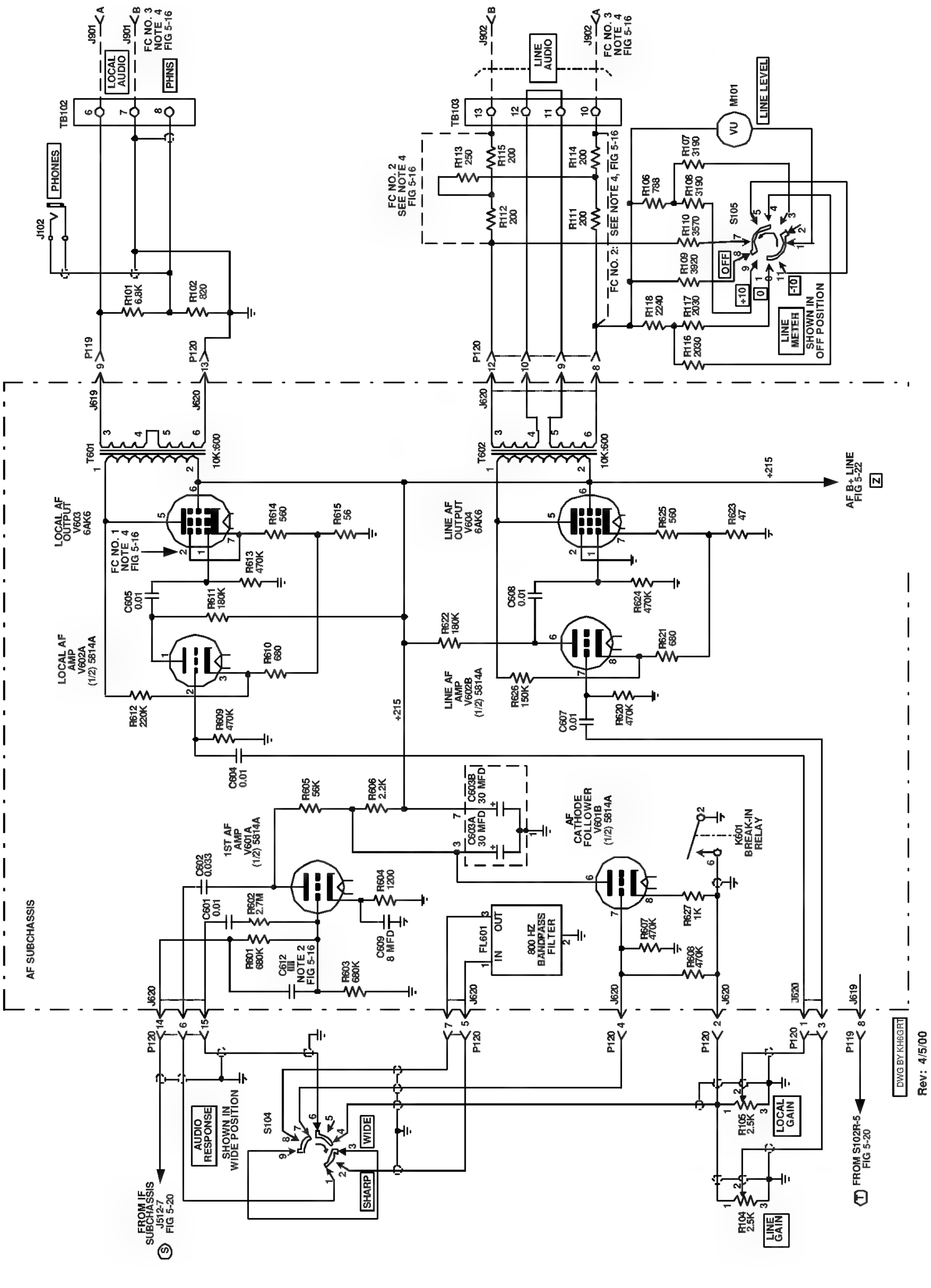

Figure 5-23 Schematic Diagram, Part 6 of 7 - Line and Local Audio Amplifiers[23]

[23] Courtesy of Pete Wokoun, KH6GRT

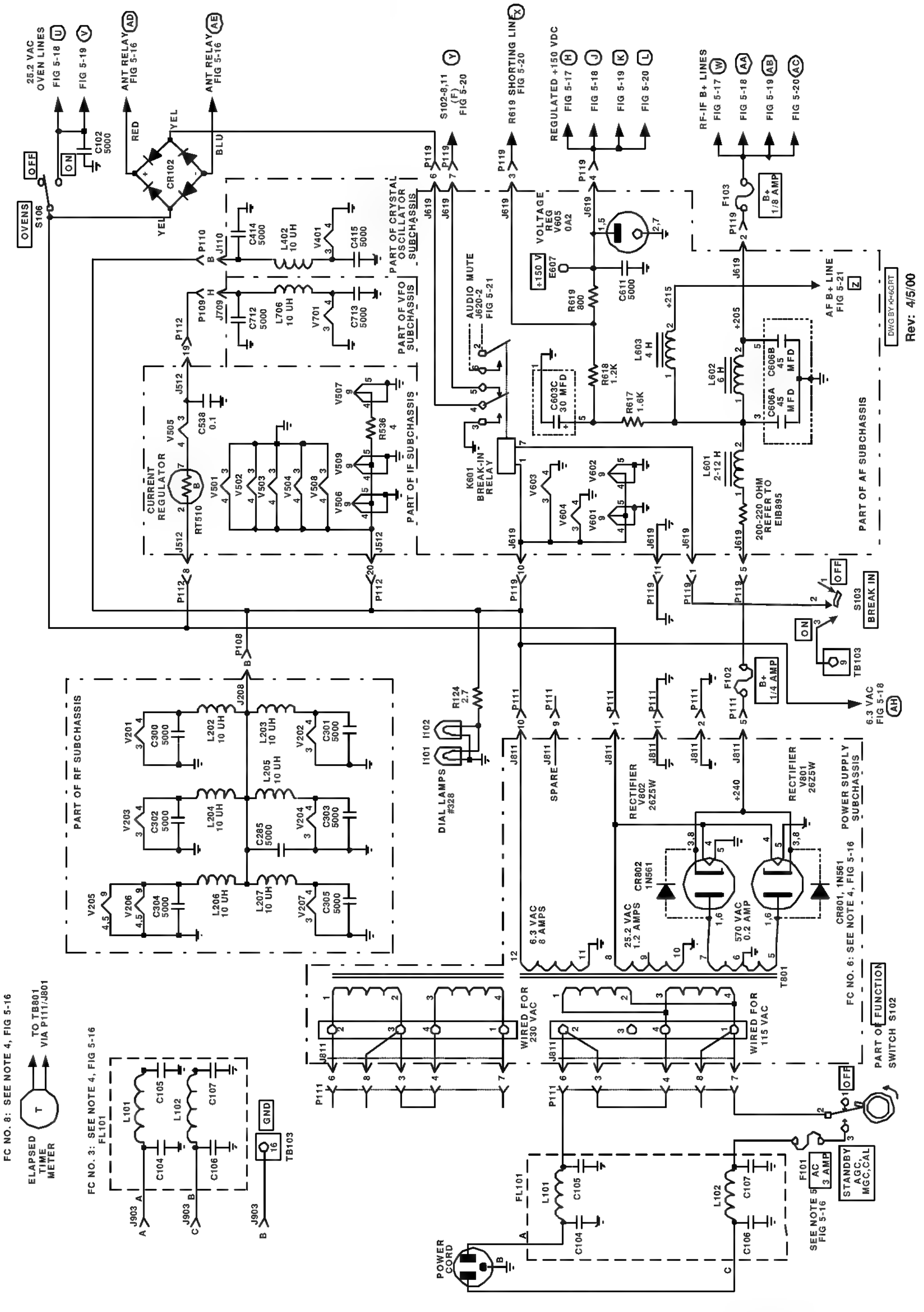

Figure 5-24 Schematic Diagram, Part 7 of 7 - Power Supply[24]

[24] Courtesy of Pete Wokoun, KH6GRT

5.6 Zoning for schematic diagrams figures 5-18 thru 5-24.

Sheet refers to the sheet number within the schematic diagram.

- Figure 5-18 = Sheet 1
- Figure 5-19 = Sheet 2
- Figure 5-20 = Sheet 3
- Figure 5-21 = Sheet 4
- Figure 5-22 = Sheet 5
- Figure 5-23 = Sheet 6
- Figure 5-24 = Sheet 7

Zone refers to location quadrant on a sheet, i.e.

- A = Upper Left
- B = Upper Right
- C = Lower Left
- D - Lower Right

Table 5-8 - Schematic Component Location Zones

REF DESIG	SHEET	ZONE
Capacitors		
C101	5	D
C102	7	B
C103	5	C
C104	7	C
C105	7	C
C106	7	C
C107	7	C
C201A	1	A
C201B	1	A
C202	1	A
C203	1	B
C204	1	B
C205A	1	A
C205B	1	A

REF DESIG	SHEET	ZONE
C206	1	A
C207	1	B
C208	1	B
C209A	1	A
C209B	1	A
C210	1	A
C211	1	B
C212	1	B
C213A	1	C
C213B	1	C
C214	1	C
C215	1	D
C216	1	B
C217A	1	C
C217B	1	C
C218	1	C
C219	1	D
C220	1	D
C221A	1	C
C221B	1	C
C222	1	C
C223	1	D
C224	1	D
C225A	1	D
C225B	1	D
C226	1	D
C227	1	B
C228	1	B
C229	1	D
C230-1	2	A
C230-2	2	A

REF DESIG	SHEET	ZONE
C231-1	2	A
C231-2	2	A
C232-1	2	A
C232-2	2	A
C233-1	2	A
C233-2	2	A
C234-1	2	A
C234-2	2	A
C235-1	2	A
C235-2	2	A
C236-1	2	A
C236-2	2	A
C237-1	2	A
C237-2	2	A
C238-1	2	A
C238-2	2	A
C239-1	2	C
C239-2	2	C
C240-1	2	C
C240-2	2	C
C241-1	2	C
C241-2	2	C
C242-1	2	C
C242-2	2	C
C243-1	2	C
C243-2	2	C
C244-1	2	C
C244-2	2	C
C245-1	2	C
C245-2	2	C
C246-1	2	C

REF DESIG	SHEET	ZONE
C246-2	2	C
C247-1	2	C
C247-2	2	C
C248	2	C
C249	2	C
C250	2	C
C251	2	C
C252	2	A
C253	2	A
C254	2	A
C255	1	B
C256	3	C
C257	1	B
C273	2	B
C274	2	B
C275	2	D
C276	2	B
C277	2	B
C278	2	B
C279	2	B
C280	2	B
C281	2	B
C282	2	B
C283-1	2	B
C283-2	2	B
C283-3	2	B
C284	2	D
C285	7	A
C286	3	A
C287	3	A
C288	3	A

REF DESIG	SHEET	ZONE
C289	3	A
C290	3	A
C291-1	3	A
C291-2	3	A
C291-3	3	A
C292-1	3	A
C292-2	3	A
C292-3	3	A
C297	3	A
C298	3	B
C299	3	B
C300	7	A
C301	7	A
C302	7	A
C303	7	A
C304	7	A
C305	7	A
C307	3	B
C308	2	B
C309	3	C
C310	3	C
C311	3	C
C312	3	C
C313	3	C
C314	3	C
C315	3	C
C316	3	C
C317	3	C
C318	2	B
C319	3	A
C320	3	C

REF DESIG	SHEET	ZONE
C321	2	D
C322	2	D
C323	2	D
C324	2	D
C325	2	D
C326	2	D
C327	2	D
C328	2	D
C329	2	B
C330-1	2	A
C330-2	2	A
C331-1	2	A
C331-2	2	A
C334	2	B
C401	4	C
C402	4	C
C403	4	A
C404	4	A
C406	4	C
C407	4	C
C408	4	C
C409	4	C
C410	4	C
C411	4	B
C412	4	D
C413	4	D
C414	7	B
C415	7	B
C417	4	D
C418	4	D
C419	4	D

REF DESIG	SHEET	ZONE
C420	4	D
C421	4	D
C422	4	D
C423	4	D
C424	4	D
C425	4	D
C426	4	B
C427	4	B
C428	4	B
C429A	4	D
C429B	4	D
C429C	4	D
C429D	4	D
C429E	4	B
C429F	4	B
C429G	4	B
C429H	4	B
C430A	4	D
C430B	4	D
C430C	4	B
C430D	4	B
C430E	4	B
C430F	4	B
C430G	4	B
C430H	4	B
C431A	4	D
C431B	4	D
C431C	4	B
C431D	4	B
C431E	4	B
C431F	4	B

REF DESIG	SHEET	ZONE
C431G	4	B
C431H	4	B
C501	5	A
C502	5	A
C503	5	A
C504	5	A
C505	5	A
C506	5	A
C507	5	A
C508	5	A
C509	5	A
C510	5	A
C511	5	A
C512	5	A
C513	5	A
C514	5	A
C515	5	A
C516	5	A
C517	5	A
C518	5	B
C519	5	B
C520	5	A
C521	5	B
C522	5	B
C523	5	B
C524	5	A
C525	5	D
C526	5	B
C527	5	B
C528	5	D
C529	5	B

REF DESIG	SHEET	ZONE
C530	5	D
C531	5	D
C532	5	D
C533	5	B
C534	5	B
C535	5	B
C536	5	D
C537	5	D
C538	7	B
C539	5	C
C540	5	C
C541	5	C
C542	5	C
C543	5	C
C544	5	C
C545	5	C
C546	5	C
C547	5	C
C548	5	C
C549	5	D
C551	5	C
C552	5	B
C553	5	A
C554	5	B
C555	5	B
C556	5	B
C557	5	B
C558	5	B
C559	5	B
C560	5	B
C561	5	D

REF DESIG	SHEET	ZONE
C562	5	D
C563	5	C
C601	6	A
C602	6	A
C603A	6	C
C603B	6	C
C603C	7	D
C604	6	A
C605	6	B
C606A	7	D
C606B	7	D
C607	6	C
C608	6	D
C609	6	A
C611	7	D
C612	6	A
C701	3	D
C702	3	D
C703	3	D
C704	3	B
C705	3	D
C706	3	B
C707	3	D
C708	3	D
C709	3	B
C710	3	D
C711	3	D
C712	7	B
C713	7	B
C714	3	D
Rectifiers		

REF DESIG	SHEET	ZONE
CR101	5	C
CR102	7	B
CR801	7	C
CR802	7	C
Test Points		
E208	1	B
E209	2	B
E210	3	A
E211	3	B
E212	1	B
E213	1	B
E402	4	A
E607	6	D
Fuses		
F101	7	C
F102	7	C
F103	7	D
Filters		
FL101	7	C
FL502	5	A
FL503	5	A
FL504	5	A
FL505	5	A
FL601	6	C
Ovens		
HR202	2	D
HR202	3	C
HR401	4	C
HR701	3	B
Lamps		

REF DESIG	SHEET	ZONE
I101	7	A
I102	7	A
I103	1	A
Jacks		
J102	6	B
J103	1	A
J104	1	A
J105	1	C
J106	1	A
J107	1	A
J110-B	7	B
J116	5	C
J208-8	7	A
J208-A	3	A
J208-D	2	D
J208-E	3	A
J208-F	3	C
J208-J	3	C
J208-K	2	D
J208C	1	D
J217	3	B
J221	2	B
J410-A	4	D
J410-C	4	C
J410-D	4	C
J410-E	4	C
J410-F	4	C
J410-H	4	C
J415	4	D
J416	4	C
J417	4	C

REF DESIG	SHEET	ZONE
J512-10	5	D
J512-11	5	D
J512-12	5	C
J512-13	5	C
J512-14	5	D
J512-15	5	C
J512-16	5	C
J512-17	5	D
J512-18	5	D
J512-19	7	B
J512-2	5	C
J512-20	7	B
J512-3	5	D
J512-4	5	C
J512-5	5	D
J512-6	5	C
J512-7	5	D
J512-8	7	B
J512-9	5	D
J513	5	A
J514	5	C
J518	5	A
J619-1	7	D
J619-10	7	D
J619-11	7	D
J619-2	7	D
J619-3	7	D
J619-4	7	D
J619-5	7	D
J619-6	7	B
J619-7	7	B

REF DESIG	SHEET	ZONE
J619-8	6	C
J619-9	6	B
J620-1	6	C
J620-10	6	D
J620-12	6	D
J620-13	6	B
J620-14	6	A
J620-15	6	A
J620-2	6	C
J620-3	6	C
J620-4	6	C
J620-5	6	A
J620-6	6	A
J620-7	6	A
J620-8	6	D
J620-9	6	D
J709-A	3	D
J709-B	3	D
J709-C	3	D
J709-D	3	D
J709-E	3	D
J709-F	3	D
J709-H	7	B
J709-J	3	D
J709-K	3	D
J811-1	7	C
J811-10	7	C
J811-11	7	C
J811-2	7	C
J811-3	7	C
J811-4	7	C

REF DESIG	SHEET	ZONE
J811-5	7	C
J811-6	7	C
J811-7	7	C
J811-8	7	C
J811-9	7	C
J901-A	6	B
J901-B	6	B
J902-A	6	D
J902-B	6	D
J903-A	7	A
J903-B	7	A
J903-C	7	A
J904	5	D
Relays		
K101A	1	A
K101B	1	A
K601	6	C
K601	7	B
Inductors		
L101	7	C
L102	7	C
L201	2	D
L202	7	A
L203	7	A
L204	7	A
L205	7	A
L206	7	A
L207	7	A
L208	2	D
L209	3	A
L210	3	C

REF DESIG	SHEET	ZONE
L211	3	C
L212	1	A
L213	1	A
L214	1	A
L215	1	A
L216	1	A
L217	1	A
L218	1	C
L219	1	C
L220	1	C
L221	1	C
L222	1	C
L223	1	C
L224-1	2	A
L224-2	2	A
L225-1	2	A
L225-2	2	A
L226-1	2	A
L226-2	2	A
L227-1	2	C
L227-2	2	C
L228-1	2	C
L228-2	2	C
L229-1	2	C
L229-2	2	C
L230	2	D
L231	2	D
L232-1	2	B
L232-2	2	B
L232-3	2	B
L233-1	3	A

REF DESIG	SHEET	ZONE
L233-2	3	A
L233-3	3	A
L234	3	B
L235	3	B
L236	3	C
L401	4	C
L402	7	B
L403	4	B
L404	4	B
L501	5	A
L502	5	D
L503	5	A
L504	5	C
L505	5	A
L506	5	B
L507	5	B
L508	5	B
L509	5	B
L510	5	B
L511	5	B
L512	5	D
L513	5	D
L514	5	C
L601	7	D
L602	7	D
L603	7	D
L701	3	D
L702	3	D
L705	3	D
L706	7	B
Meters		

REF DESIG	SHEET	ZONE
M101	6	D
M102	5	C
Plugs		
P108-A	3	A
P108-B	7	A
P108-C	1	D
P108-D	2	D
P108-E	3	A
P108-F	3	C
P108-H	2	D
P108-J	3	C
P108-K	2	D
P109-A	3	D
P109-B	3	D
P109-C	3	D
P109-D	3	D
P109-E	3	D
P109-F	3	D
P109-H	7	B
P109-J	3	D
P109-K	3	D
P110-A	4	D
P110-B	7	B
P110-C	4	C
P110-D	4	C
P110-E	4	C
P110-F	4	C
P110-H	4	C
P111-1	7	C
P111-10	7	C
P111-11	7	C

REF DESIG	SHEET	ZONE
P111-2	7	C
P111-3	7	C
P111-4	7	C
P111-5	7	C
P111-6	7	C
P111-7	7	C
P111-8	7	C
P111-9	7	C
P112-10	5	D
P112-11	5	D
P112-12	5	C
P112-13	5	C
P112-14	5	D
P112-15	5	C
P112-16	5	C
P112-17	5	D
P112-18	5	D
P112-19	7	B
P112-2	5	C
P112-20	7	B
P112-3	5	D
P112-4	5	C
P112-5	5	D
P112-6	5	C
P112-7	5	D
P112-8	7	B
P112-9	5	D
P114	5	C
P116	5	C
P119-1	7	D
P119-10	7	D

REF DESIG	SHEET	ZONE
P119-11	7	D
P119-2	7	D
P119-3	7	D
P119-4	7	D
P119-5	7	D
P119-6	7	B
P119-7	7	B
P119-8	6	C
P119-9	6	B
P120-1	6	C
P120-10	6	D
P120-12	6	D
P120-13	6	B
P120-14	6	A
P120-15	6	A
P120-2	6	C
P120-3	6	C
P120-4	6	C
P120-5	6	A
P120-6	6	A
P120-7	6	A
P120-8	6	D
P120-9	6	D
P205	1	C
P206	1	A
P207	1	A
P215	4	D
P221	2	B
P416	4	C
P417	4	C
P513	5	A

REF DESIG	SHEET	ZONE
P518	5	A
P717	3	B
Resistors		
R101	6	B
R102	6	B
R103	5	C
R104	6	C
R105	6	C
R106	6	D
R107	6	D
R108	6	D
R109	6	D
R110	6	D
R111	6	D
R112	6	D
R113	6	D
R114	6	D
R115	6	D
R116	6	D
R117	6	D
R118	6	D
R119	5	D
R120	5	D
R121	1	A
R124	7	A
R201	1	D
R202	1	D
R203	1	D
R204	1	D
R205	2	B
R206	3	A

REF DESIG	SHEET	ZONE
R207	2	D
R208	2	B
R209	2	B
R210	2	D
R211	2	D
R212	2	B
R213	3	A
R214	3	A
R215	3	A
R216	3	A
R217	3	A
R218	3	B
R219	3	B
R220	3	C
R221	3	C
R222	3	C
R223	3	C
R224	3	C
R225	3	C
R226	3	C
R227	3	C
R228	3	C
R229	3	C
R230	3	B
R231	2	B
R232	2	B
R233	1	B
R234	1	D
R235	3	C
R404	4	C
R405	4	C

REF DESIG	SHEET	ZONE
R406	4	D
R407	4	D
R501	5	A
R502	5	A
R503	5	A
R504	5	A
R505	5	A
R506	5	A
R507	5	A
R508	5	A
R511	5	B
R512	5	B
R513	5	B
R514	5	B
R515	5	B
R516	5	B
R518	5	B
R519	5	B
R520	5	B
R521	5	B
R522	5	D
R523	5	D
R524	5	D
R525	5	B
R526	5	D
R527	5	D
R528	5	B
R529	5	B
R530	5	B
R531	5	B
R532	5	D

REF DESIG	SHEET	ZONE
R533	5	D
R534	5	D
R535	5	D
R536	7	B
R537	5	D
R538	5	C
R539	5	C
R540	5	C
R541	5	C
R542	5	C
R543	5	C
R544	5	C
R545	5	C
R546	5	C
R547	5	C
R548	5	C
R549	5	C
R550	5	B
R551	5	B
R552	5	C
R553	5	B
R554	5	B
R601	6	A
R602	6	A
R603	6	A
R604	6	A
R605	6	A
R606	6	A
R607	6	C
R608	6	C
R609	6	A

REF DESIG	SHEET	ZONE
R610	6	A
R611	6	B
R612	6	A
R613	6	B
R614	6	B
R615	6	B
R617	7	D
R618	7	D
R619	7	D
R620	6	C
R621	6	C
R622	6	A
R623	6	D
R624	6	D
R625	6	D
R626	6	C
R627	6	C
R701	3	D
R702	3	D
R703	3	D
R704	3	B
Ballast Tube		
RT510	7	B
Switches		
S101	5	D
S102	7	C
S102F	5	C
S102R	5	D
S103	7	D
S104	6	A
S105	6	D

REF DESIG	SHEET	ZONE
S106	7	B
S107	5	C
S108	5	D
S201	1	A
S202	1	C
S203F	1	D
S203R	1	D
S204F	1	B
S204R	1	B
S205	1	D
S206	2	A
S207	2	B
S208F	2	D
S208R	2	D
S401	4	A
S402	4	B
S403	4	C
S501	5	A
S502F	5	A
S502R	5	A
S503F	5	A
S503R	5	A
S701	3	D
Transformers		
T201	1	A
T202	1	A
T203	1	A
T204	1	A
T205	1	C
T206	1	C
T207	2	D

REF DESIG	SHEET	ZONE
T208	3	B
T401	4	B
T501	5	B
T502	5	B
T503	5	D
T601	6	B
T602	6	D
T701	3	B
T801	7	C
Terminal Blocks		
TB102-1	5	C
TB102-2	5	C
TB102-3	5	C
TB102-4	5	C
TB102-5	5	C
TB102-6	6	B
TB102-7	6	B
TB102-8	6	B
TB103-10	6	D
TB103-11	6	D
TB103-12	6	D
TB103-13	6	D
TB103-14	5	D
TB103-15	5	D
TB103-16	5	D
TB103-16	7	A
TB103-9	7	C
Tubes		
V201	1	B
V202	2	B
V203	3	A

REF DESIG	SHEET	ZONE
V204	3	B
V205A	3	C
V205B	3	C
V206	3	C
V207	2	D
V401	4	A
V501	5	A
V502	5	B
V503	5	B
V504	5	D
V505	5	B
V506A	5	C
V506B	5	D
V507	5	D
V508	5	C
V509A	5	C
V509B	5	C
V601A	6	A
V601B	6	C
V602A	6	A
V602B	6	C
V603	6	B
V604	6	D
V605	7	D
V701	3	B
V801	7	C
V802	7	C
Crystals		
Y201	2	D
Y203	3	C
Y401	4	A

REF DESIG	SHEET	ZONE
Y402	4	A
Y403	4	A
Y404	4	A
Y405	4	A
Y406	4	A
Y407	4	A
Y408	4	A
Y409	4	A
Y410	4	A
Y411	4	A
Y412	4	A
Y413	4	A
Y414	4	A
Y415	4	A
Y501	5	A
Assemblies		
Z201-1	2	A
Z201-2	2	A
Z202-1	2	A
Z202-2	2	A
Z203-1	2	A
Z203-2	2	A
Z204-1	2	C
Z204-2	2	C
Z205-1	2	C
Z205-2	2	C
Z206-1	2	C
Z206-2	2	C
Z213-1	2	B
Z213-2	2	B
Z213-3	2	B

REF DESIG	SHEET	ZONE
Z216-1	3	A
Z216-2	3	A
Z216-3	3	A
Z501	5	A
Z502	5	B
Z503	5	C
Z702	3	B

6. - Chapter 6 - Corrective Maintenance

TABLE OF CONTENTS

6. - CHAPTER 6 - CORRECTIVE MAINTENANCE........ 6-1

6.1 INTRODUCTION........ 6-3
6.2 ALIGNMENT AND ADJUSTMENT PROCEDURES........ 6-3
6.2.1 General Alignment Information........ 6-3
6.2.2 Test Equipment and Special Tools........ 6-3
6.2.3 Test Conditions........ 6-3
6.2.4 Preparation for Alignment........ 6-4
6.2.5 Mechanical and Electrical Synchronization........ 6-4
6.2.6 Adjusting ZERO ADJ Control........ 6-13
6.2.7 Alignment of Fixed-Tuned IF Circuits........ 6-14
6.2.8 Adjustment of GAIN ADJ Potentiometer R519........ 6-16
6.2.9 Crystal-Oscillator Sub-Chassis Trimmer Adjustment........ 6-17
6.2.10 Second Variable IF Alignment........ 6-17
6.2.11 First Variable IF Alignment........ 6-20
6.2.12 RF Coil Alignment........ 6-22
6.2.13 Beat-Frequency Oscillator Neutralization........ 6-22
6.2.14 Calibration Oscillator Adjustment C310........ 6-24
6.2.15 CARR-METER ADJ Potentiometer R-523 Adjustment. (See figure 6-16.)........ 6-24
6.2.16 Variable-Frequency Oscillator End-Point Adjustment. (See figure 6-7.)........ 6-25
6.2.17 Crystal Filter Neutralizing........ 6-27
6.2.18 Antenna Trimmer Control Adjustment........ 6-28
6.3 REPAIR........ 6-29
6.3.1 Notes on Removals and Replacements........ 6-29
6.3.2 Removal and Replacement of Front Panel........ 6-31
6.3.3 Removal and Replacement of RF Subchassis........ 6-33
6.3.4 Removal and Replacement of RF Subchassis Parts........ 6-36
6.3.5 Removal and Replacement of Crystal Oven HR202........ 6-37
6.3.6 Disassembly and Assembly of Crystal Oven HR202 to Replace Crystals........ 6-38
6.3.7 Removal and Replacement of Crystal-Oscillator Subchassis........ 6-40
6.3.8 Removal and Replacement of Crystals Under HR401 Crystal Oven Cover........ 6-42
6.3.9 Removal and Replacement of IF Subchassis........ 6-43
6.3.10 Removal and Replacement of IF Subchassis Parts........ 6-46
6.3.11 Removal and Replacement of VFO Subchassis........ 6-48
6.3.12 Removal and Replacement of VFO Subchassis Parts........ 6-50
6.3.13 Power-Supply Subchassis Removal and Replacement........ 6-52
6.3.14 AF Subchassis Removal and Replacement........ 6-55
6.3.15 Removal and Replacement of Incandescent Lamps........ 6-55
6.3.16 Disassembly of RF Gear Train Assembly........ 6-63
6.3.17 Disassembly of Camshaft Assemblies........ 6-66
6.3.18 Reassembly of Camshaft Assemblies........ 6-68
6.3.19 Reassembly of RF Gear Train Assembly........ 6-69
6.4 PARTS LOCATION........ 6-72

FIGURES

Figure 6-1 RF Gear Train Assembly, Location of Parts 6-6
Figure 6-2 Mechanical Alignment Details 6-8
Figure 6-3 Location of RF Band Switch Shaft Clamp, Detent Spring and Ten-Turn Stops 6-11
Figure 6-4 Oldham Coupler Details 6-12
Figure 6-5 Crystal-Oscillator and IF Subchassis Alignment Points 6-18
Figure 6-6 RF and Variable IF Alignment Points 6-21
Figure 6-7 Variable Frequency Oscillator End-Point Adjustment 6-26
Figure 6-8 ANT TRIM Control Adjustment 6-28
Figure 6-9 Location of Front Panel Mounting Screws 6-30
Figure 6-10 RF, IF and Crystal Calibrator Subchassis - Removal and Replacement, Location of Screws 6-35
Figure 6-11 Location of Crystals Y201 and Y202 6-39
Figure 6-12 Location of Crystals Y401 through Y415 6-42
Figure 6-13 RF Gear Train Assembly Cam Positions Viewed From rear, Simplified Mechanical Diagram 6-43
Figure 6-14 Radio Receiver R-390A/URR. Top View 6-44
Figure 6-15 Radio Receiver R-390A/URR, Bottom View 6-49
Figure 6-16 IF Subchassis, Top View 6-51
Figure 6-17 IF Subchassis, Front Section 6-53
Figure 6-18 IF Subchassis, Rear Section 6-54
Figure 6-19 RF Subchassis, Top View (Sheet 1 of 2) 6-56
Figure 6-20 RF Subchassis, Front Section 6-58
Figure 6-21 RF Subchassis, Bottom View, Rear Section 6-59
Figure 6-22 Crystal Oscillator Subchassis - Top View 6-60
Figure 6-23 Crystal Oscillator Subchassis, Bottom View 6-61
Figure 6-24 Crystal Oscillator Subchassis, Internal View of Crystals 6-62
Figure 6-25 VFO Subchassis, Top View 6-73
Figure 6-26 VFO Subchassis, Bottom View 6-74
Figure 6-27 AF Subchassis, Top View 6-75
Figure 6-28 AF Subchassis, Bottom View 6-76
Figure 6-29 Power-Supply Subchassis, Top View 6-77
Figure 6-30 Power-Supply Subchassis, Bottom View 6-78
Figure 6-31 Antenna Relay Assembly, Internal View 6-79
Figure 6-32 Radio Receiver R-390A/URR, Front Panel and Interior of Main Frame 6-80
Figure 6-33 R390A TB101 with Field Change 2 6-81
Figure 6-34 Tuning System Showing Relationship of Stages, Block Diagram 6-82
Figure 6-35 Radio Receiver R-390A/URR, Main Frame Wiring Diagram (Sheet 1 of 2) 6-83
Figure 6-36 - RF Gear Train Assembly, Exploded View 6-92
Figure 6-37 Front Panel 6-93
Figure 6-38 - Rear Panel 6-94

TABLES

Table 6-1- IF Alignment Chart 6-15
Table 6-2 - RF Alignment Chart 6-23
Table 6-3 - Mechanical Filters and Associated Trimmers 6-47

6.1 Introduction

6.1.1 This Chapter provides alignment and repair procedures to enable maintenance personnel to correct deficiencies found as a result of scheduled maintenance and troubleshooting procedures In Chapter 4 and 5 respectively. Before any alignment is attempted all faulty components should be located and replaced. A definite need for alignment should be established by accomplishing sensitivity and bandwidth tests (paragraphs 4.3.1 and 4.3.2) after eliminating faulty components.

6.1.2 The alignment section describes the recommended method by which the equipment is set up, test equipment is connected and used, and necessary adjustments are made to ensure proper equipment performance

6.1.3 The repair section outlines the methods necessary for disassembly, cleaning, repairing, and reassembly required to replace a faulty component within the receiver.

6.2 Alignment and Adjustment Procedures

6.2.1 General Alignment Information

Use a fluted no. 8 Bristo wrench for adjusting the antenna, the RF, and the variable IF cores. Use the same tool for adjusting the tuning shafts during mechanical synchronization. Use a nonmetallic screwdriver for adjusting the various trimmer capacitors. Use a hexagonal, nonmetallic tool for adjusting the cores in T501, T502, T503, and Z503 on the IF subchassis. Be sure that this tool is inserted through the top core into the bottom core, and that the bottom core turns without disturbing the setting of the top core. Make this type of adjustment only after the particular coil or transformer has been replaced.

6.2.2 Test Equipment and Special Tools

1. RF Signal Generator AN/URM-25
2. Impedance Adapter MX-1487/U
3. Electronic Multimeter AN/USM-116
4. Multimeter AN/PSM-4

6.2.3 Test Conditions

1. Temperature: Normal room or shelter.
2. Humidity: Normal room or shelter.
3. Line Voltage and Frequency: 115 or 230 volts ac ± 1 percent at 60 Hz.
4. Warm-up Period: At least 15 minutes.
5. Standard Modulation: 30 percent AM at 400 Hz.

6.2.4 Preparation for Alignment

Before applying power to the receiver, the following conditions must exist:

1. All the controls must operate freely and the knobs must be securely attached to their shafts.
2. The tubes and tube shields must be securely in place.
3. All connectors must be seated firmly.
4. The KILOCYCLE CHANGE dial overtravel must not be less than 25 kHz at each end.
5. The receiver must be grounded, and ac power must be applied; the front-panel controls must be set according to table 4-2.
6. The B+ voltage between chassis ground and the +150V test point E607 (figure 6-28) should be between +148 volts and +153 volts.
7. All tube filaments must be lit.
8. The antenna relay must be actuated when the FUNCTION switch is placed in the STANDBY and CAL positions.
9. CARR-METER ADJ control R523 (figure 6-16) on the IF subchassis must be adjusted for a CARRIER LEVEL meter indication of 0.

6.2.5 Mechanical and Electrical Synchronization

The receiver tuning elements, which consist of the frequency indicator, KILOCYCLE CHANGE, and MEGACYCLE CHANGE 10-turn stops, the 6-position RF band switch, the second crystal band switch, and the VFO, must be in synchronization with the RF gear train before electrical alignment is attempted. If the receiver is being realigned because of low sensitivity or replacement of parts such as the variable IF, the fixed IF, or the RF transformers, it should not be necessary to check the mechanical and electrical synchronization. Nonsynchronization of the tuning shafts and the RF gear train is likely to occur as a result of the removal and replacement of the RF subchassis, crystal-oscillator subchassis, VFO subchassis, or the disassembly of part or all of the RF gear train assembly. Check and adjust the following items as may be necessary.

6.2.5.1 **Ten-Turn Stops.** Check the 10-turn stops (figure 6-3) by rotating the MEGACYCLE CHANGE and KILOCYCLE CHANGE shafts fully counterclockwise. The first two digits on the frequency indicator should indicate halfway between 99 and 00 MHz (off the detent position). The next three digits should indicate between -963 and -972 kHz.

6.2.5.2 **Slug-Rack Cams and Followers.** (See figure 6-2.) Check the slug-rack cam followers at the high and low ends of each coil range. Normally, all cam followers should be near (but not at) the peak of the cams at the high end of the coil ranges.

⇒ **Note:**	If the cam followers do not function as described below, follow repair procedure in paragraphs 6.3.16 through 6.3.19.

1. All cam followers, except the cams for the 0.5- to 1-MHz range, should not quite reach the peak of the cams at the high end of the range.
2. The cam followers for the 0.5- to 1-MHz range may pass over the peak of the cams for a KILOCYCLE CHANGE control reading of +025 or higher.
3. All cam followers except the 0.5- to 1-MHz cam followers should not quite reach the valley of the cams as the KILOCYCLE CHANGE control is turned to the low end of the coil range.
4. The 0.5- to 1-MHz cam followers may pass through the valley and start up the other side of the cams as the KILOCYCLE CHANGE control is adjusted to a reading of about 475.
5. The cam follower on first variable IF transformer Z213 (17.5 to 25 MHz) is near the valley of the cam when the KILOCYCLE CHANGE control reading is 500, and rises to near the peak at 07 +000.
6. The cam follower on second variable IF transformer Z216 (3 to 2 MHz) is near the valley of the cam when the KILOCYCLE CHANGE control is rotated fully clockwise, and near the peak when the KILOCYCLE CHANGE control is fully counterclockwise.

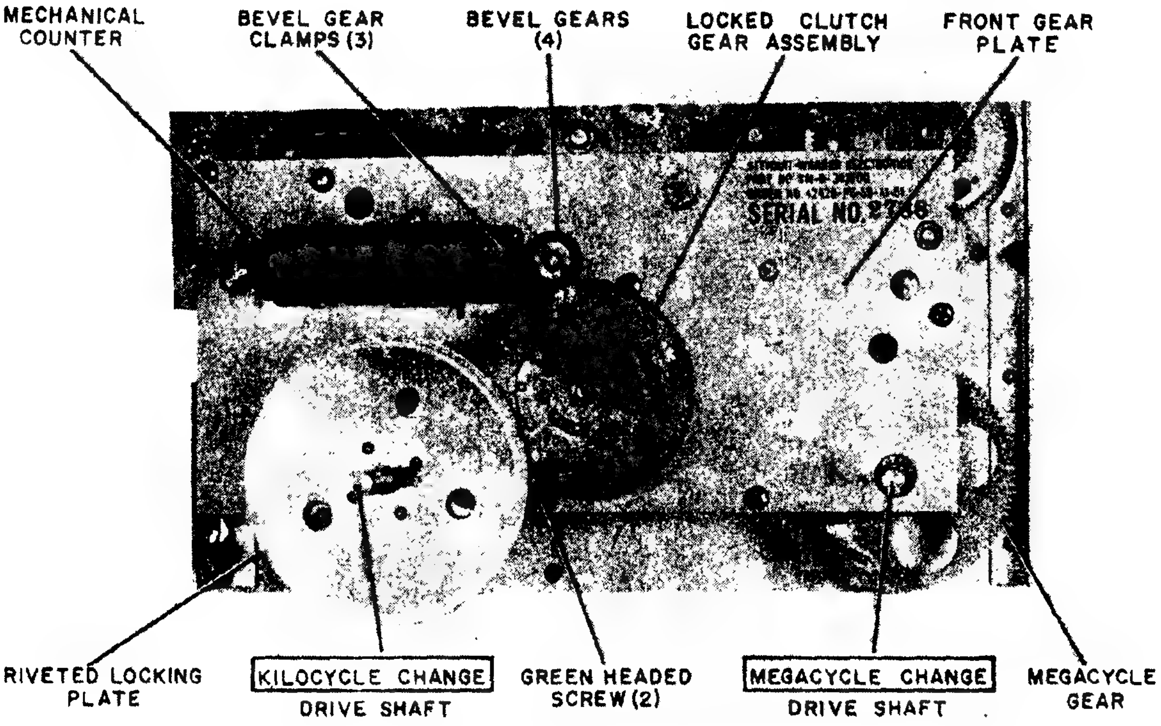

Figure 6-1. RF Gear Train Assembly, Location of Parts

Figure 6-1 RF Gear Train Assembly, Location of Parts

6.2.5.3 **Camshafts.**

⇒ **Note:**	If any cams have been synchronized with the RF subchassis removed from the main frame, the VFO subchassis must be synchronized (par 6. 2. 5. 6) after the RF subchassis is replaced.

1. Set the MEGACYCLE CHANGE and KILOCYCLE CHANGE controls for a frequency-indicator reading of +000. The camshafts are synchronized if the cam positioning marks on the pressed cam plates line up with the points of the cams and the intermittent switch drive gears. Figure 6-2 shows the front and figure 6-13 shows the rear of the cam plate.
2. If all the cams line up at some other frequency indications, perform the following:
    a) Position the MEGACYCLE CHANGE and KILOCYCLE CHANGE controls until the cam points are lined up with the cam positioning marks.
    b) Loosen the two bevel gear clamps on the mechanical counter (figure 6-1).
    c) Manually adjust the counter dial to 07 +000.
    d) Tighten the gear clamps.
3. If one cam does not line up with the cam position mark, perform the following:
    1. Loosen the clamp on the front end of the individual camshaft.
    2. Line up the cam point with the cam positioning mark.
    3. Tighten the clamp.

⇒ **Note:**	To avoid losing the nut, do not loosen the clamp more than necessary. Be careful not to strip the screw thread when tightening.

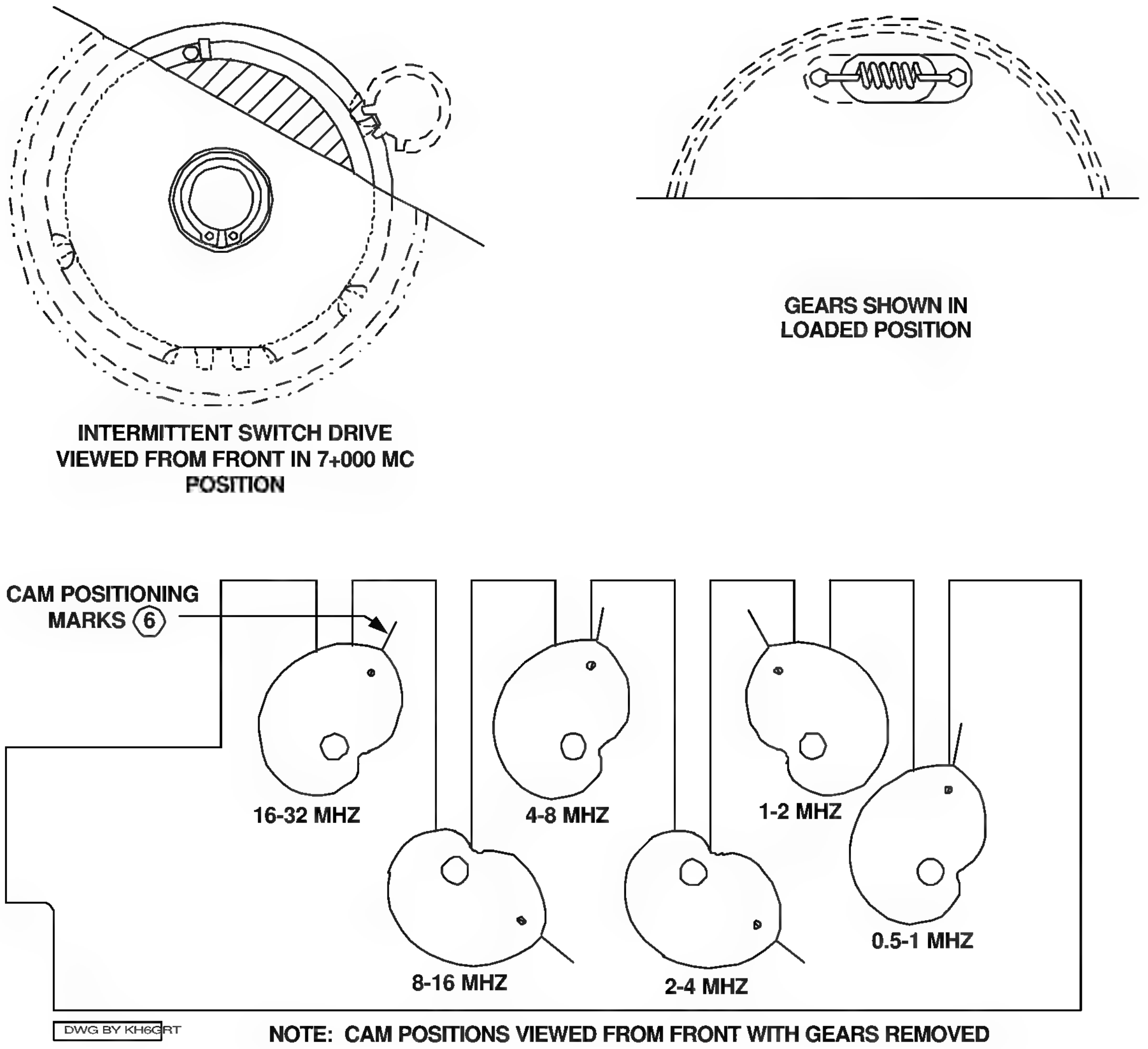

Figure 6-2 Mechanical Alignment Details[1]

[1] Courtesy of Pete Wokoun, KH6GRT

6.2.5.4 **Six-Position RF Band Switch.** (See figure 6-20.)

1. Position the MEGACYCLE CHANGE and KILOCYCLE CHANGE controls for a frequency-Indicator reading of 07 +000.
2. Remove V207.
3. Disconnect P108 (figure 6-14) from J208.
4. Connect Multimeter AN/PSM-4 ( ) between pin 6 of XV207 and pin D of J208. The Indication should be approximately 200k ohms after Field Change 7 has been accomplished.
5. Turn the MEGACYCLE CHANGE control to 08. The AN/PSM-4 ( ) should indicate an infinite reading.
6. If the indications are not as in 4 and 5 above, continue with procedures 7, 8, and 9.
7. Disconnect the PSM-4 ( ) and reinsert V207.
8. Remove the front panel (paragraph 6.3.2) and the RF subchassis (paragraph 6.3.3).
9. Loosen the RF band switch clamp (figure 6-3). Turn the band switch shaft until the rotors are centered on the contacts, which provide the indications required in procedures 4 and 5 above. Tighten the RF band switch clamp.

6.2.5.5 Crystal-Oscillator Subchassis Band Switch

1. The crystal-oscillator band switch is synchronized when the indicator-wheel number (figure 6-14) that appears in the hole on the crystal-oscillator subchassis agrees with the first two digits of the frequency indicator.

⇒ **Note:**	Only even numbers appear on the indicator wheel; odd numbers appear as straight lines between numbers; 00 on the frequency indicator appears as 0.

2. If the Indication is incorrect set the receiver controls as directed in paragraph 5.5.2 and turn the FUNCTION switch to STANDBY.
3. Connect Electronic Multimeter AN/USM-116 ( ) between test point E210 (figure 6-19) and chassis ground.
4. Loosen the shaft coupler. Insert a long screwdriver through the SYNC XTAL OSC hole in the rear panel of the receiver and turn the crystal-oscillator band switch shaft to the correct number.
5. Tighten the shaft coupler.
6. Turn the MEGACYCLE CHANGE control to each side of the detent point. The AN/USM-116 ( ) indication should be -3.5 to -8 volts at the detent point and should drop to zero each side of the detent point. If not, readjust the crystal-oscillator band switch shaft (4 and 5 above) to meet this condition.
7. Disconnect the AN/USM-116 ( ).

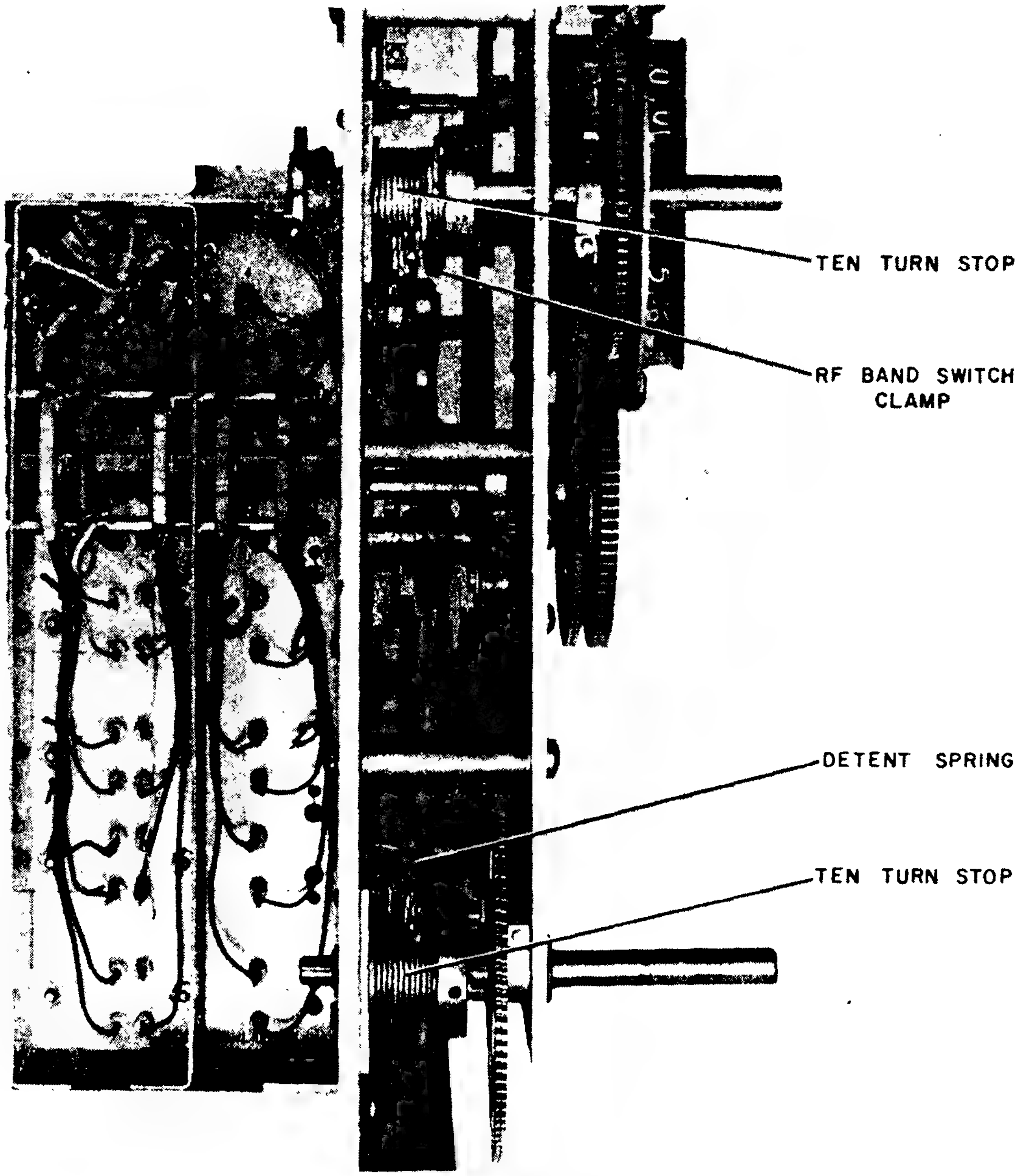

Figure 6-3. Location of RF Band Switch Shaft Clamp, Detent Spring and Ten-Turn Stops

Figure 6-3 Location of RF Band Switch Shaft Clamp, Detent Spring and Ten-Turn Stops

6.2.5.6 VFO Tuning Shaft

1. Preset the receiver (paragraph 5.5.2). Turn the FUNCTION switch to MGC. Allow 15 minutes for warm-up.
2. Tune the receiver to station WWV or a local station of known frequency. Be sure to set the frequency indicator exactly to the station's assigned frequency.
3. Turn the BANDWIDTH switch to 1.
4. Remove the antibacklash spring on the Oldham coupler (figure 6-4) and loosen the VFO (figure 6-15) shaft clamp nearest the front panel.

⇒ **Caution:**	The VFO will be permanently damaged if the shaft is turned too far in either direction. The end of shaft travel can be felt while turning the shaft with the fingers. Do not force the shaft.

5. Turn the shaft until the station is tuned for maximum loudness.
6. Tighten the shaft coupler and replace the anti-backlash spring.
7. With the first two digits of the frequency indicator set at any position except 00, check the receiver calibration at the low, middle, and high frequency end of the band.

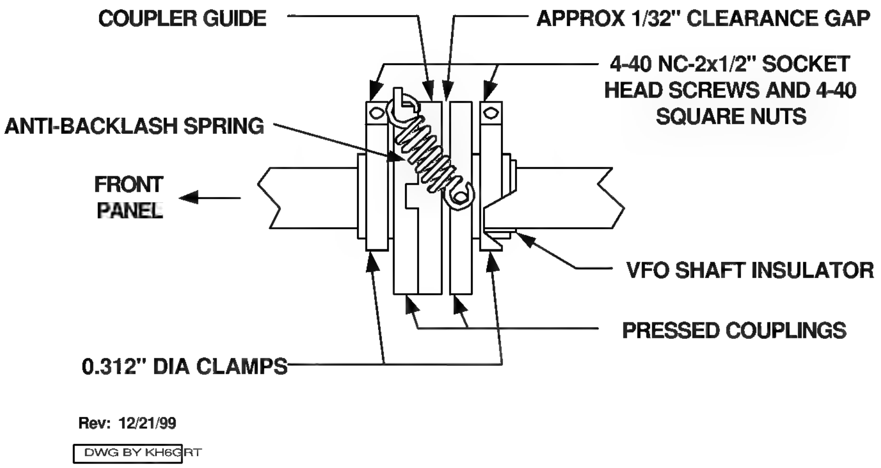

Figure 6-4 Oldham Coupler Details[2]

[2] Courtesy of Pete Wokoun, KH6GRT

6.2.6 Adjusting ZERO ADJ Control

Check the adjustment of the ZERO ADJ control as follows:

1. Turn the ZERO ADJ knob fully counterclockwise. Slowly turn the knob clockwise and observe the free play in the knob. The free play should be approximately 1/8 turn.
2. If there is no free play, or if the free play is excessive, remove the knob.
3. With the thumb and forefinger, adjust the shaft for approximately 1/8-turn free play.
4. Replace the knob so that the stop on the rear of the knob is directly to the right of, and touching the finger on, the ZERO ADJ control locking washer on the front panel. Tighten the knob.
5. Turn the ZERO ADJ control fully clockwise to the stop, and check to see that the locked clutch gear assembly (figure 6-1) is disengaged. Do this by rocking the KILOCYCLE CHANGE control back and forth and observing the reading of the frequency indicator to see that it does not change.
6. Turn the ZERO ADJ control fully counterclockwise to the stop and recheck for approximately 1/8-turn free play.
7. Repeat the procedures in 2 through 6 above if the free play and clutch disengagement are not as specified.

6.2.7 Alignment of Fixed-Tuned IF Circuits

IF transformers T501, T502, and T503 are stagger-tuned in some models and all are tuned to 455 kHz in other models. IF transformer T208 (figure 6-19) and tuned circuit Z503 are tuned to 455 kHz on all models. Normally, none of these components require alignment. However, when T501, T502, or T503 is replaced in any model, all three transformers should be aligned as directed in the procedures given in paragraph 6.2.7.1 below. Transformer T208 can be adjusted from the top of the transformer cover, but T501, T502, T503, and Z503 cannot be adjusted unless their covers are removed and modified covers installed temporarily

6.2.7.1 **Alignment of T501, T502, and T503**. (See figure 6-16.)

1. Set the controls as indicated in paragraph 5.5.2. Turn the BANDWIDTH switch to 16, and the FUNCTION switch to MGC.
2. Disconnect P114 from J514, P213 from J513, and P218 from J518. Connect P114 to J513.
3. Connect the output of the AN/URM-25 ( ) to the IF OUTPUT jack on the receiver rear panel.
4. Remove the cover from T501, T502, or T503, whichever is to be replaced, by removing the top nuts and lockwashers. Punch or drill a hole in the top of the removed cover. The hole must be large enough to pass the alignment tool and must be centered over the transformer core when installed.
5. Install the replacement transformer T501, T502, or T503 complete with the modified cover.
6. Locate resistor R504 (figure 6-18). If the resistor has a value of 1,000 ohms, replace it with a 560-ohm resistor of the same wattage.
7. Connect the AN/USM-116 ( ) to the front panel DIODE LOAD jack.
8. Remove the cover from transformer T501 and replace it with the modified cover (4 above). Tune the AN/URM-25 ( ) to 467 kHz and adjust its output for a diode load voltage between -3 and -7 volts.
9. Adjust the secondary (top) slug of T501 for maximum diode load voltage. Reduce the signal generator output, as necessary, to keep the diode load voltage between -3 and -7 volts.
10. Remove the modified cover from T501 and replace it with the permanent cover.
11. Follow the procedures given in 8, 9, and 10 above and adjust the primaries and secondaries of T502 and T503, and the primary of T501, in the order listed in table 6-1

12. When the alignment is complete and the permanent covers are on all three transformers, disconnect the test equipment and reconnect P114 to J514, P113 to J513, and P218 to J518.

Table 6-1- IF Alignment Chart

STEP	MODIFIED COVER ON	AN/URM-25 ( ) FREQUENCY	ADJUST
1	T501 and T502	467	T501 secondary (top slug) T502 primary (bottom slug)
2	T501 and T502	443	T501 primary (bottom slug) T502 secondary (top slug)
3	T503	455	T503 primary (bottom slug) T503 secondary (top slug)

6.2.7.2 **Alignment of Z503.**

1. Perform the procedures given in 1 through 3 above.
2. Turn the FUNCTION switch to AGC.
3. Replace Z503 if it is defective. Remove the cover from the old Z503, and punch or drill a hole in the top of it. Replace the cover on the new coil.
4. Connect the AN/USM-116 ( ) to AGC terminal 4 and chassis ground on the rear panel of the receiver.
5. Tune the AN/URM-25 ( ) to 455 kHz, and adjust the attenuator on the AN/URM-25 ( ) for an AGC voltage indication of -1 to -2 volts on the AN/USM-116 ( ).
6. Adjust the single core in Z503 for maximum AGC voltage; then remove the cover (3 above) and replace it with the new cover.

6.2.7.3 **Alignment of T208.**

1. Set the receiver controls as instructed in paragraph 6.2.7.1, step 1. Turn the BANDWIDTH switch to 2.
2. Connect the output of the AN/URM-25 ( ) to test point E211 (figure 6-19). Connect the AN/USM-116 to the front panel DIODE LOAD jack.
3. Tune the AN/URM-25 ( ) to 455 kHz and adjust the AN/URM-25 ( ) attenuator to a AN/USM-116 reading of between -3 and -7 volts.

4. Adjust T208 for maximum indication on the AN/USM-116 ( ). The adjustment of T208 will be broad.
5. Disconnect the test equipment

6.2.8 Adjustment of GAIN ADJ Potentiometer R519

(See figure 6-16.)

6.2.8.1 **General**. The correct adjustment of this control is very important. If it is set too low, the receiver sensitivity will be below that required; if it is set too high, the receiver noise will be excessive. This adjustment should be checked monthly and whenever any tubes are replaced in the RF or IF subchassis. When two receivers are operated in diversity operation, the IF outputs should be balanced with GAIN ADJ R519. This is done by setting the gain of one receiver, and then matching the gain of the other receiver to it.

6.2.8.2 **Procedure for Adjustment.**

1. Disconnect P114 from J514, P213 from J513, and P218 from J518. Connect P114 to J513.
2. Connect the AN/URM-25 ( ) through Adapter, Test MX-1487/URM-25D or Impedance Matching Network CU-206/URM-25F to the IF OUTPUT jack on the rear panel of the receiver.
3. Tune the AN/URM-25 ( ) to 455 kHz and adjust the AN/URM-25 ( ) attenuator for an output level of 150 microvolts. Be sure that the modulation is turned off.
4. Connect the AN/USM-116 ( )to the front panel DIODE LOAD jack.
5. Set the receiver controls as instructed in paragraph 5.5.2. Turn the FUNCTION switch to MGC.
6. Loosen the hexagonal nut on the GAIN ADJ control and adjust the control for a diode load voltage reading of -7 volts ✐1 VDC. Tighten the hexagonal nut.
7. Disconnect the test equipment. Reconnect P213 to J513, P218 to J518, and P114 to J514.

6.2.8.3 **Adjustment for Diversity Operation.** When the signals at the IF OUTPUT jacks of the two receivers are used for diversity operation, proceed as follows:

1. Check forward and reverse resistance of CR101. The ratio must be at least 50 to 1.
2. Adjust one receiver according to the instructions given in paragraph 6.2.8.2 above.
3. Perform the procedures in paragraph 6.2.8.2 above for the second receiver. Do not change the settings of the AN/URM-25 ( ) in any way.

6.2.9 Crystal-Oscillator Sub-Chassis Trimmer Adjustment

(See figure 6-5.)

1. Check the synchronization of the crystal-oscillator subchassis band switch (paragraph 6.2.5.5).
2. Preset the receiver controls (paragraph 5.5.2). Turn the FUNCTION switch to CAL.
3. Turn the MEGACYCLE CHANGE control to 08 and adjust the corresponding trimmer for a maximum CARRIER LEVEL meter indication.
4. Turn the MEGACYCLE CHANGE control to each band from 08 through 31 and adjust the corresponding trimmer for a maximum CARRIER LEVEL meter indication.

⇒ **Note:**	Trimmers no. 8 and 9 correspond to frequency-indicators no. 08 and 09. There are no adjustments for bands 00 through 07. Check only for output on these bands.

6.2.10 Second Variable IF Alignment

6.2.10.1 **Preparation.**

1. Preset the receiver controls (paragraph 5.5.2). Turn the frequency indicator to 01 900.
2. Calibrate the receiver (paragraph 2.3.2.1).
3. Turn the FUNCTION switch to MGC.
4. Connect the AN/USM-116 ( ) to the DIODE LOAD jack on the front panel and connect the AN/URM-25 to test point E210 using Test Lead CX-1363/U (part of AN/URM-25 ()).

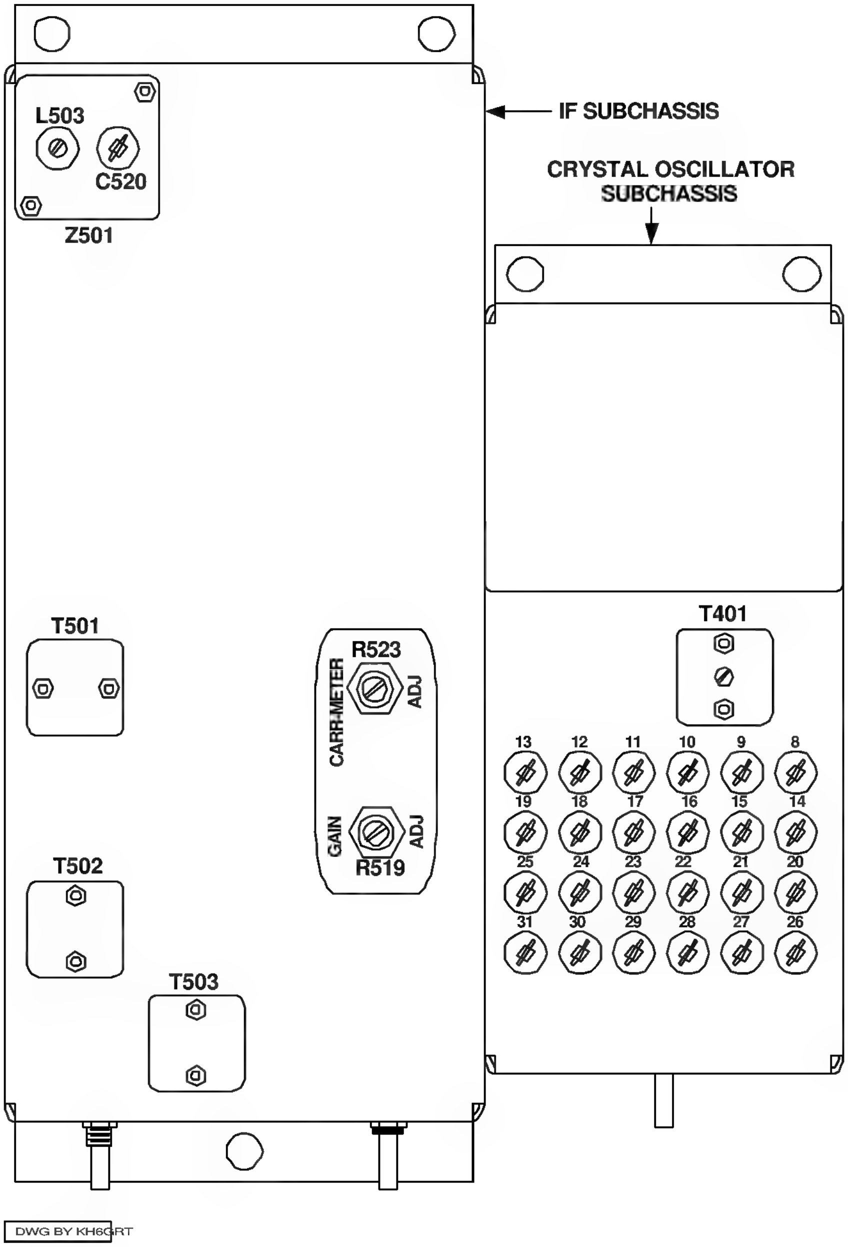

Figure 6-5 Crystal-Oscillator and IF Subchassis Alignment Points[3]

[3] Courtesy of Pete Wokoun, KH6GRT

6.2.10.2 **Alignment**.

(See figure 6-6.)

⇒ Note:	In steps 2 and 5 below, set the AN/URM-25 ( ) to the specified frequency. Check the accuracy of the setting by means of Frequency Counter AN/USM-207 ( ). During alignment readjust the AN/URM-25 ( ) output level as necessary to keep the AN/USM-116 ( ) indication between -3 and -5 volts.

1. Set the receiver frequency-indicator at 01 900.
2. Tune the AN/URM-25 ( ) to 2.1 MHz.
3. Adjust the slugs in Z216-1, Z216-2, and Z216-3, (L233-1 through L233-3) for a maximum AN/USM-116 ( ) indication.
4. Set the receiver frequency-indicator at 01 100.
5. Tune the AN/URM-25 ( ) to 2.9 MHz.
6. Adjust the trimmer capacitors in Z216-1, Z216-2, and Z216-3 (C291-1 through C291-3) for a maximum AN/USM-116 ( ) indication.
7. Repeat the procedures given in 1 through 6 above until no further increase in AN/USM-116 indication is obtainable.

6.2.11 First Variable IF Alignment

6.2.11.1 **Preparation.**

1. Preset the receiver controls (paragraph 5.5.2).
2. Set the frequency indicator at 01 200.
3. Calibrate the receiver (paragraph 2.3.2.1).
4. Turn the FUNCTION switch to MGC.
5. Connect the AN/USM-116 ( ) to the DIODE LOAD jack on the front panel. Connect the AN/URM-25 to test point E209 using Test Lead CX- 1363/U (part of AN/URM-25 ( )).

6.2.11.2 **Alignment**. (See figure 6-6.)

⇒ Note:	In steps 2 and 7 below, set the AN/URM-25 ( ) to the specified frequency. Check the accuracy of the setting by means of Frequency Counter AN/USM- 207. During alignment readjust the AN/URM-25( ) output level as necessary to keep the AN/USM-116 ( ) indication between -3 and -5 volts.

1. Set the receiver frequency indicator to 01 250.
2. Tune the AN/URM-25 ( ) to 18.25 MHz.
3. Adjust the slugs in Z213-1, Z213-2, and Z213-3 (L232-1 through L232-3) for a maximum AN/USM-116 ( ) indication.
4. Set the receiver frequency indicator to 07 200.
5. Recalibrate the receiver.
6. Set the receiver frequency indicator to 07 250.
7. Tune the AN/URM-25 ( ) to 24.25 MHz.
8. Adjust the trimmer capacitors in Z213-1, Z213-2, and Z213-3 (C283-1 through C283-3) for a maximum AN/USM-116 ( ) indication.
9. Repeat the procedures given in 1 through 8 above until no further increase in AN/USM-116 indication is obtainable.

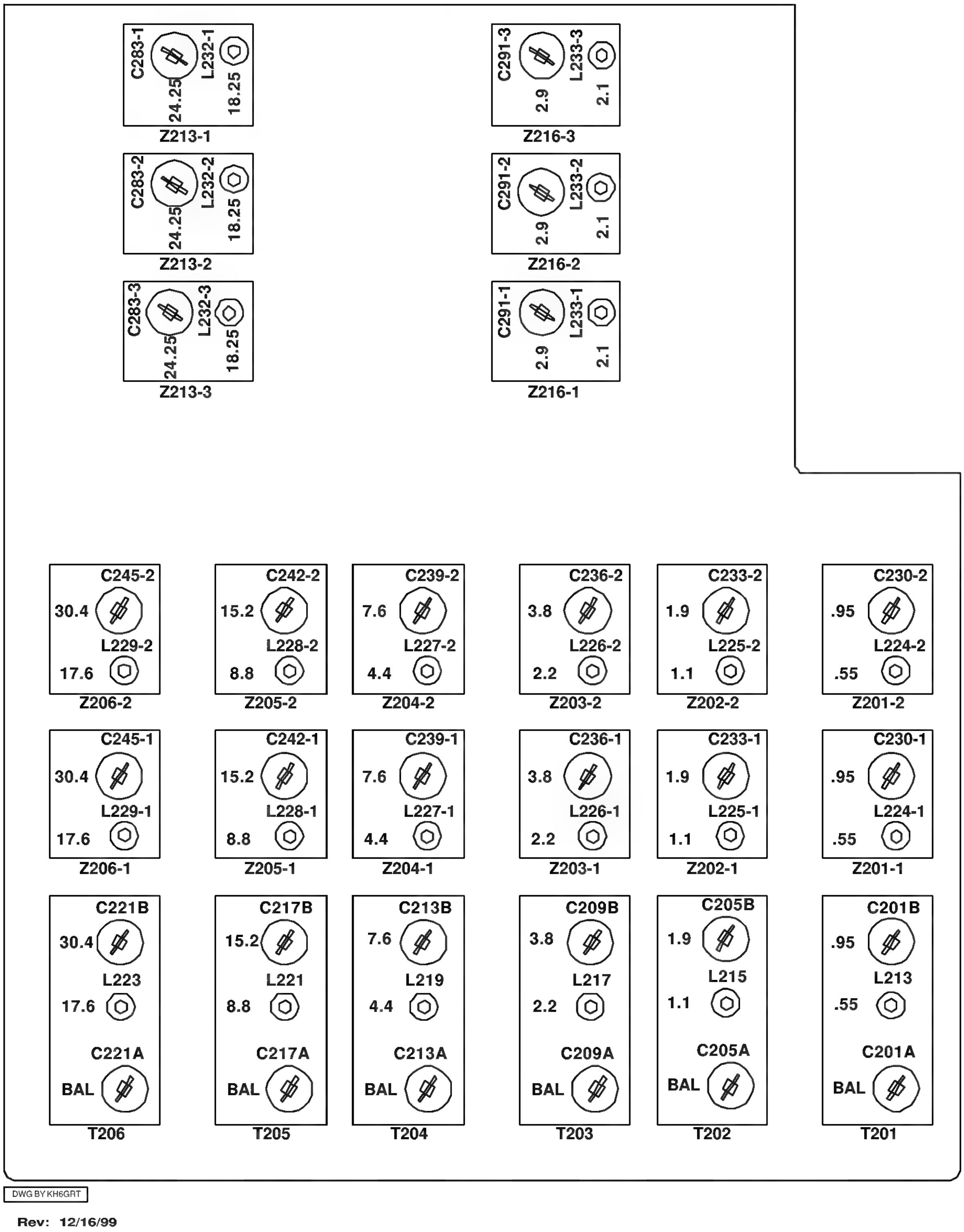

Figure 6-6 RF and Variable IF Alignment Points[4]

[4] Courtesy of Pete Wokoun, KH6GRT

6.2.12 RF Coil Alignment

6.2.12.1 **Preparation.**

1. Preset the receiver controls (paragraph 5.5.2).
2. Turn the ANT TRIM control to 0 and the FUNCTION switch to MGC.
3. Connect the AN/USM-116 ( ) to the DIODE LOAD test jack on the front panel. Using Impedance Adapter MX-1487/U, connect the RF OUTPUT of AN/URM-25 () to ANTENNA UNBALANCED jack J103 on back of receiver.

6.2.12.2 **Procedure.** (See figure 6-6.) Perform each step in the RF alignment chart (table 6-2) by repeating the two steps given below.

1. Set the receiver and the AN/URM-25 ( ) to the frequency listed. Check the accuracy of the signal generator setting by means of Frequency Counter AN/USM-207.
2. Adjust the slugs or trimmer capacitors for maximum AN/URM-116 ( ) indication.

⇒ **Note:**	Adjust the AN/URM-25 ( ) RF output level, as necessary, to keep the AN/URM-116 ( ) indication between -3 and -7 volts.

6.2.13 Beat-Frequency Oscillator Neutralization

1. Preset the receiver controls (paragraph 5.5.2). Set the BANDWIDTH switch to 1 and the FUNCTION switch to CAL.
2. Tune the receiver for a maximum CARRIER LEVEL meter indication at any 100-kHz calibration point.
3. Turn the BFO switch to ON and turn the BFO PITCH control to 1.
4. Set the FUNCTION switch to AGC and the BANDWIDTH switch to 2.
5. Connect RF Voltmeter ME-30B/U to IF OUTPUT jack J116 on the receiver rear panel.
6. Disconnect P213 (figure 6-14) from J513, and short J513 to chassis ground.
7. Insert an insulated screwdriver through the receiver left end plate access hole and adjust BFO neutralization capacitor C525 (figure 6-17) for a minimum ME-30B/U indication.

Table 6-2 - RF Alignment Chart

RECEIVER MHz	RECEIVER kHz	AN/URM-25 ( ) FREQ kHz	ADJUST SLUGS FOR PEAK	ADJUST TRIMMER CAPACITORS FOR PEAK
00	550	550	L213 L224-1 L224-2	
00	950	950		C201-B C230-1 C230-2
01	100	1,100	L215 L225-1 L225-2	
01	900	1,900		C205-B C233-1 C233-2
02	200	2,200	L217 L226-1 L226-2	
03	800	3,800		C209-B C236-1 C236-2
04	400	4,400	L219 L227-1 L227-2	
07	600	7,600		C213-B C239-1 C239-2
08	800	8,800	L221 L228-1 L228-2	
15	200	15,200		C217-B C242-1 C242-2
17	600	17,600	L223 L229-1 L229-2	
30	400	30,400		C221-B C245-1 C245-2

6.2.14 Calibration Oscillator Adjustment C310.

This adjustment requires the use of an extremely accurate frequency standard for determining the reference frequency. Harmonics of the 5 Megahertz output from either the AN/URQ-9 or AN/URQ-10 (frequency standard) are to be used in making this adjustment.

1. Tune the receiver to 25 MHz (5th harmonic of the frequency standards 5 MHz output).
2. Turn the BANDWIDTH switch to .1.
3. Tune the receiver to the exact resonance by adjusting the KILOCYCLE CHANGE and ANT TRIM controls for a maximum CARRIER LEVEL meter indication.
4. Turn the LINE GAIN control to approximately 5, turn the LINE METER switch to -10 and adjust the LINE GAIN control for a half-scale LINE LEVEL meter indication.
5. Turn the BFO switch to ON and adjust the BFO PITCH control to the exact zero beat with the signal from the frequency standard. This will be when the LINE LEVEL meter indication drops to zero and fluctuates at a rate slow enough to be counted.
6. Turn the FUNCTION switch to CAL.
7. Use a screwdriver to adjust the CAL ADJ capacitor C310 (figure 6-21) through the rear-panel access hole for exact zero beat (a minimum LINE LEVEL meter indication).
8. Turn the FUNCTION switch to AGC, and tune to other harmonics of the 5 MHz frequency (5, 10, 15 and 20 MHz) to check the accuracy of the calibration oscillator adjustment.

6.2.15 CARR-METER ADJ Potentiometer R-523 Adjustment. (See figure 6-16.)

1. Set the FUNCTION switch to AGC and turn the RF GAIN control fully counterclockwise.
2. Adjust the CARR-METER ADJ potentiometer on the IF subchassis for a zero reading of the CARRIER LEVEL meter on the receiver front panel.

6.2.16 Variable-Frequency Oscillator End-Point Adjustment. (See figure 6-7.)

After the receiver has been in service for about a year, a frequency check of the variable-frequency oscillator may reveal that its range may not be exactly 3.455 to 2. 455 MHz. In most cases, this condition is caused by aging of the frequency-determining components in the sealed VFO subchassis, and can be compensated for by the adjustment of end-point adjustment L701. Access to this adjustment is made by the removal of the screw on the front of the sealed VFO unit.

⇒ **Note:**	Make this adjustment if the inaccuracy of the VFO exceeds 500 Hz when checked from 000 to +000 on the last three digits of the frequency indicator. Make the end-point adjustment as follows:

1. Remove the VFO subchassis (paragraph 6.3.11.1).
2. Remove the end-point-adjustment cover nut.
3. Replace the VFO subchassis (paragraph 6.3.11.2).
4. Preset the receiver controls (paragraph 5.5.2) and allow the receiver to warm up for at least 1 hour.

⇒ **Note:**	Set the OVENS switch on the receiver rear panel to the ON position.

5. Calibrate the receiver (paragraph 2.3.2.1) at exactly 07 +000.
6. Remove the front panel (paragraph 6.3.2.1).
7. Turn the riveted locking plate (figure 6-1) by hand for a frequency-indicator setting of 07 +000.
8. Use a screwdriver (1/8-inch wide blade) through the VFO end-point-adjustment access hole (figure 6-7) to adjust L701 for zero beat.
9. Turn the riveted locking plate by hand for a setting of exactly 07 +000.
10. Turn the shaft of the BFO PITCH control for zero beat.
11. Repeat the procedures given in 7 through 10 above until no further improvement can be made.
12. When the job has been completed, remove the VFO, replace the end-point-adjustment nut, replace the VFO, replace the front panel (paragraph 6.3.2.2).

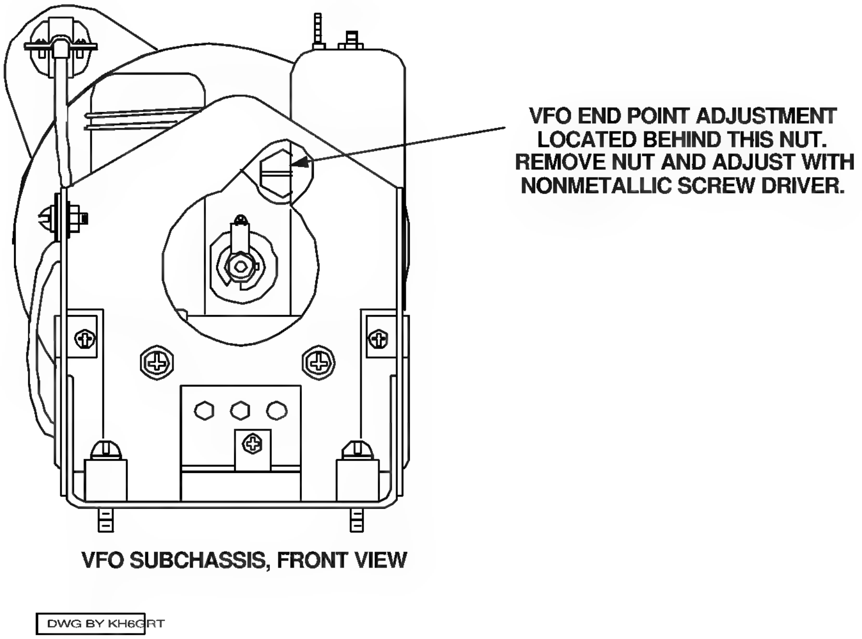

Figure 6-7 Variable Frequency Oscillator End-Point Adjustment[5]

[5] Courtesy of Pete Wokoun, KH6GRT

6.2.17 Crystal Filter Neutralizing.

(See figure 6-5.) Capacitor C520 in tuned circuit Z501 usually needs adjustment only when part or all of Z501 is replaced or when C520 is turned accidentally. Proceed as follows:

1. Preset the receiver controls (paragraph 5.5.2). Set the BANDWIDTH switch to .1 and the FUNCTION switch to MGC.
2. Connect the AN/USM-116 ( ) to the DIODE LOAD test jack on the front panel. Connect the AN/URM-25 ( ) to test point E211 (figure 6-19) using Test Lead CX-1363/U (part of AN/URM-25 ( )).
3. Tune the AN/URM-25 ( ) to 455 kHz and adjust its RF output level for a AN/USM-116 ( ) indication of -5 volts.
4. Rock the AN/URM-25 ( ) tuning dial for a maximum AN/USM-116 ( ) indication: then readjust the RF output level for a -7 volt AN/USM-116 ( ) indication.
5. Record the AN/URM-25 ( ) RF output level, and then increase it by 60 dB.
6. Increase the AN/URM-25 ( ) frequency until the AN/USM-116 ( ) again indicates -7 volts.
7. Adjust C520 for a dip in the AN/USM-116 ( ) indication, and mark the C520 setting on the Z501 shield can.
8. Decrease the AN/URM-25 ( ) frequency below 455 kHz until the AN/USM-116 ( ) indication is again -7 volts.
9. Readjust C520 for a dip in the AN/USM-116 ( ) indication and mark this second C520 setting on the Z501 shield can.
10. Set C520 halfway between the marks made in procedures 7 and 9 above.
11. Retune the AN/URM-25 ( ) for a maximum AN/USM-116 ( ) indication at 455 kHz, then readjust the RF output level for a -7-volt AN/USM-116 ( ) indication. Record the AN/URM-25 ( ) frequency setting.
12. Turn the BANDWIDTH switch to 1.
13. Retune the AN/URM-25 ( ) for a maximum AN/USM-116 ( ) indication. Compare the peak frequency with the one recorded in procedure 11 above.
14. If the peak frequency is different, adjust L503 in Z501 until the peak frequency is the same for both the .1 and 1-kHz positions of the BANDWIDTH switch.

⇒ **Note:**	This may require several readjustments of L503.

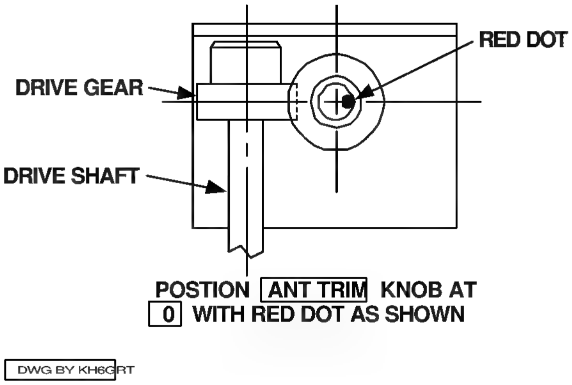

Figure 6-8 ANT TRIM Control Adjustment[6]

6.2.18 Antenna Trimmer Control Adjustment.

6.2.18.1 The ANT TRIM control is properly adjusted if the gear with the red dot is positioned as shown in figure

6-8 when the ANT TRIM control is set at 0.

6.2.18.2 If adjustment is necessary, proceed as follows:

1. Loosen the drive gear set screws.
2. Turn the gear with the red dot to the position shown in figure 6-8.
3, Turn the ANT TRIM knob to 0 while holding the drive gear to prevent the gear with the red dot from turning.
4. Tighten the drive gear set screws.

[6] Courtesy of Pete Wokoun, KH6GRT

6.3 REPAIR

6.3.1 Notes on Removals and Replacements.

This section contains instructions for the removal and replacement of the subchassis, the subassemblies, and certain, parts in Radio Receiver R-390A/URR. All the subchassis, except the RF subchassis, can be removed from the main frame of the receiver without removal of the front panel or other subassemblies in the receiver. Avoid changing the setting of the KILOCYCLE CHANGE control or any of the switches or shafts operated by the MEGACYCLE CHANGE control when the RF, the IF, and the VFO sub-chassis are operated out of the receiver main frame, if these controls must be operated, reset them to their previous settings.

6.3.1.1 All the threaded fasteners that secure the subassemblies to the main frame of the receiver are color coded with green screw heads. Loosen and remove only these screws unless otherwise instructed. The only exceptions to the use of the green-headed screws are the front-panel screws that secure the front panel of the receiver (figure 6-9). Some of the securing screws are the conventional threaded type, and the remainder are captive screws. Captive screws remain attached to the subassembly that they secure when the subassembly is removed from the main frame. All captive and mounting screws are loosened and removed with the Phillips screwdriver supplied with the receiver. All knobs, shaft couplers, gears, and cams are loosened and removed with a no, 8 Bristo (fluted) wrench.

6.3.1.2 All RF and power connectors used in the receiver are readily removed by hand. The rectangular power connectors are removed by being pulled outward with a slight rocking motion. The polygon-shaped power connectors have locking shells that must be rotated counterclockwise before being removed from their mating connectors. The coaxial RF connectors also must be rotated counterclockwise before being removed from their mating connectors.

6.3.1.3 The use of two wooden blocks, about 2 inches thick and 12 inches long, is necessary for supporting the main frame of the receiver when it is placed on a bench or table. Place the wooden blocks under the bottom side edges of the receiver. This allows the front panel to be removed and rested on its handles.

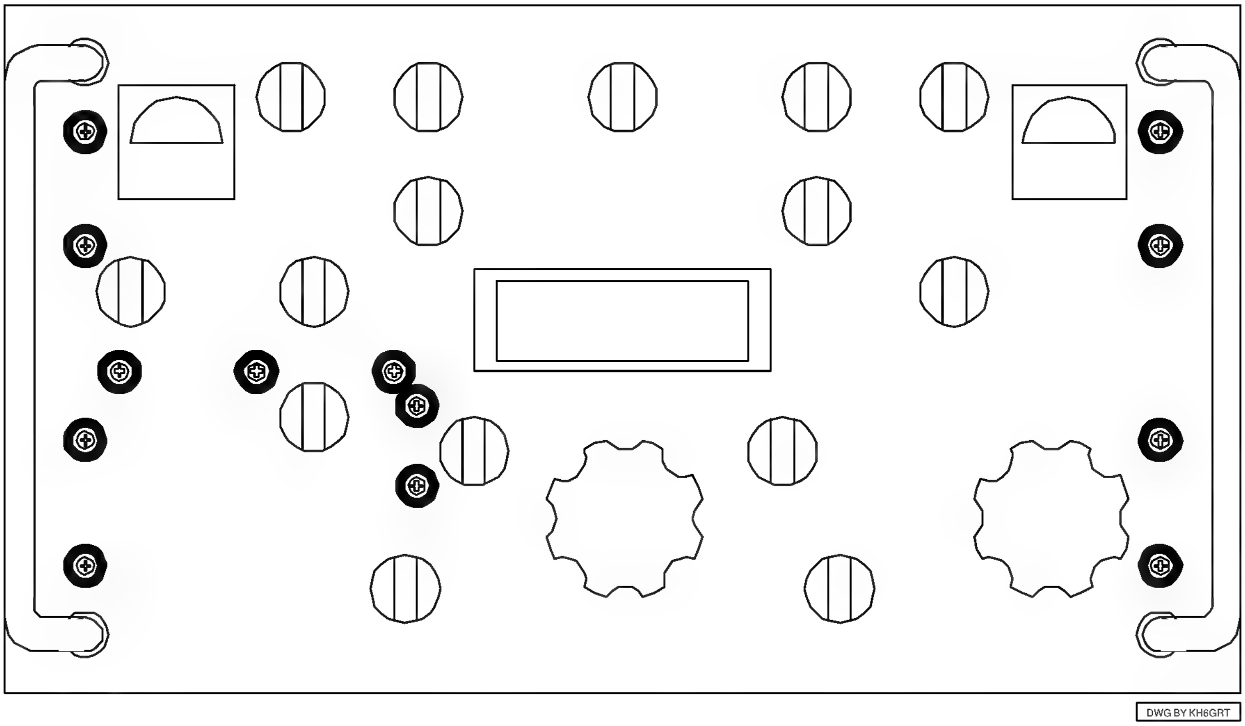

Figure 6-9 Location of Front Panel Mounting Screws[7]

[7] Courtesy of Pete Wokoun, KH6GRT

6.3.2 Removal and Replacement of Front Panel.

(See figure 6-9.) The front panel must be removed whenever the removal of the RF subchassis and its RF gear train assembly is required. Follow the procedures in the order listed in paragraph 6.3.2.1 to prevent damage or mechanical misalignment of the tuning system.

6.3.2.1 **Removal.**

1. Remove the top and bottom dust covers if they were not removed during installation.
2. Turn the DIAL LOCK fully counterclockwise.
3. Turn the KILOCYCLE CHANGE control knob fully counterclockwise (approximately -963 on the kilocycle counter).
4. Turn the MEGACYCLE CHANGE control knob fully counterclockwise (approximately 00 on the megacycle counter).
5. Set the BFO PITCH and the ANT TRIM knobs to 0, and the BANDWIDTH switch to 16.
6. Use a no. 8 Bristo wrench to remove the MEGACYCLE CHANGE, KILOCYCLE CHANGE, ANT TRIM, and DIAL LOCK control knobs.
7. Use a 1/2-inch socket wrench to loosen the hexagonal nut on the DIAL LOCK shaft, turn the DIAL LOCK mechanism (figure 6-32) behind the front panel (to disengage it) so that it is in a vertical position, and hand tighten the hexagonal nut.
8. Use the no. 8 Bristo wrench to loosen, but do not remove the BFO PITCH shaft coupler. Grasp the BFO PITCH control knob and pull it outward from the front panel to separate the knob shaft and coupler from the BFO PITCH shaft.
9. Use the no. 8 Bristo wrench to loosen the BANDWIDTH shaft coupler, and pull the knob and shaft outward.
10. Remove the four 5/8-inch by 8-32 flat Phillips-head screws on the left side of the front panel. These screws are vertical and in line with the left front-panel handle. Remove the four similar screws on the right side of the front panel. Remove the five 7/16-inch by 6-32 flat Phillips screws and the external tooth lock washers on the front panel.
11. Grasp the front-panel handles and pull forward with a slight vertical rocking motion. The front panel will separate from the main frame, while riding on the shafts of the KILOCYCLE CHANGE, the MEGACYCLE CHANGE, and the ANT TRIM controls.
12. Carefully lower the front panel to the bench top; rest it on its handles.

⇒ Caution:	Be sure that the DIAL LOCK mechanism does not bind on the riveted locking plate mounted on the KILOCYCLE CHANGE shaft while attempting to remove front panel.

6.3.2.2 **Replacement.**

1. Check to see that the DIAL LOCK mechanism is in a vertical position and that the ZERO ADJ knob is fully counterclockwise.
2. Grasp the front panel by the two handles and slide it forward on the KILOCYCLE CHANGE, the MEGACYCLE CHANGE, and the ANT TRIM shafts with a slight vertical rocking motion, while pushing forward.
3. Grasp the DIAL LOCK shaft and rotate the mechanism so that its jaws loosely clutch the riveted locking plate on the KILOCYCLE CHANGE shaft. Set the mechanism in the position that allows the raised surface on the mechanism to fall into the aligning dimple on the rear side of the front panel.
4. Replace and secure the front panel with the eight 5/8-inch by 8-32 screws and the five 7/16-inch by 6-32 screws and the five lock washers.
5. Tighten the DIAL LOCK hexagonal nut with a 1/2-inch socket wrench. Replace the knob, allowing a 1/8-inch clearance between the knob and the front panel.
6. Replace the remaining knobs on their respective shafts. Allow a 1/8-inch clearance between the front panel and the MEGACYCLE CHANGE and the KILOCYCLE CHANGE control knobs.
7. Engage and tighten the shaft couplings on the BANDWIDTH and BFO PITCH controls. Be sure that the BANDWIDTH control knob is tightened on the 16 position and that the BFO PITCH control and the ANT TRIM knobs are tightened to 0.
8. Turn all the knobs previously removed through their entire range, checking for smoothness of operation and freedom from binding.

6.3.3 Removal and Replacement of RF Subchassis.

(See figure 6-10.) Remove the RF subchassis and the crystal-oscillator subchassis as one unit.

6.3.3.1 Removal.

To remove the RF and crystal-oscillator subchassis, proceed as follows:

1. Place the receiver on its left side and remove the antibacklash spring from the Oldham coupler (figures6-4 and 6-25) on the VFO assembly.
2. Remove the front panel (paragraph 6.3.2.11).
3. Remove the RF subchassis cover plate.
4. Disconnect plugs P110, P205, P206, P207, P717, P213, P218, and P108 (figure 6-14).
5. Remove the two 5/16-inch by 6-32 green-headed Phillips screws and lock washers (figure 6-1). One of the screws is removable through an access hole in the front gear plate.
6. Remove the two 1/2-inch by 6-32 green-headed Phillips screws and lock washers (1, figure 6-10) through the access hole provided in the left side of the main frame. These two screws are in a vertical row.
7. Remove the three 1/2-inch by 6-32 green-headed Phillips screws and lock washers (2) that are located at the right side of the main frame. These three screws are in a vertical row.
8. Loosen the two green-headed captive screws (3) and the two green headed captive screws (4).
9. Grasp the RF subassembly by the two 5-5/8-inch spacers and lift it carefully upward out of the main frame. Place the RF subchassis on the bench. Remove the crystal-oscillator subassembly only when necessary (paragraph 6.3.7.1).

6.3.3.2 Replacement.

These instructions are for replacement of the RF subchassis with the crystal-oscillator subchassis attached, if the crystal-oscillator subchassis has been removed from the RF subchassis, secure it to the RF subchassis (paragraph 6.3.7.2).

⇒ Caution:	Before reinstalling the subchassis, be sure that the KILOCYCLE CHANGE shaft is fully counterclockwise.

1. If the center disk of the Oldham coupler has been removed, apply a little grease on it and place it on the end disk attached to the VFO subchassis shaft.
2. Grasp the RF subchassis by the two 5-5/8-inch spacers and place it into the main frame. Secure the RF subchassis in place by replacing, but not tightening, one or two of the green-headed Phillips machine screws and their lock washers. Leaving these screws loose allows shifting of the subchassis when replacing the other screws.
3. Set the receiver on its left side with two wooden blocks under it and check the fitting of the Oldham coupler on the VFO subchassis. The center disk of the Oldham coupler should join the two end disks with about 1/32-inch play in the coupler.
4. Engage the two green-headed captive screws (3) at the rear of the crystal-oscillator subassembly; do not lock them. Engage, but do not lock, the two green-headed captive screws (4) at the rear of the RF subassembly.
5. Engage the three green-headed Phillips screws and lock washers (2) and the two green-headed Phillips screws (1). Engage the two green-headed Phillips screws and lockwashers at the front under the clutch gear and tuning mechanism.
6. Tighten all the green-headed screws (figure 6-10) in the following order:
   - Three marked (2).
   - Four captive screws marked (3) and (4).
   - Two marked (1).
   - Two below the clutch gear (figure 6-1).
7. Reconnect plugs P110, P717, P205, P206, P207, P213, P218, and P108.
8. Replace the front panel (paragraph 6. 3. 2. 2).

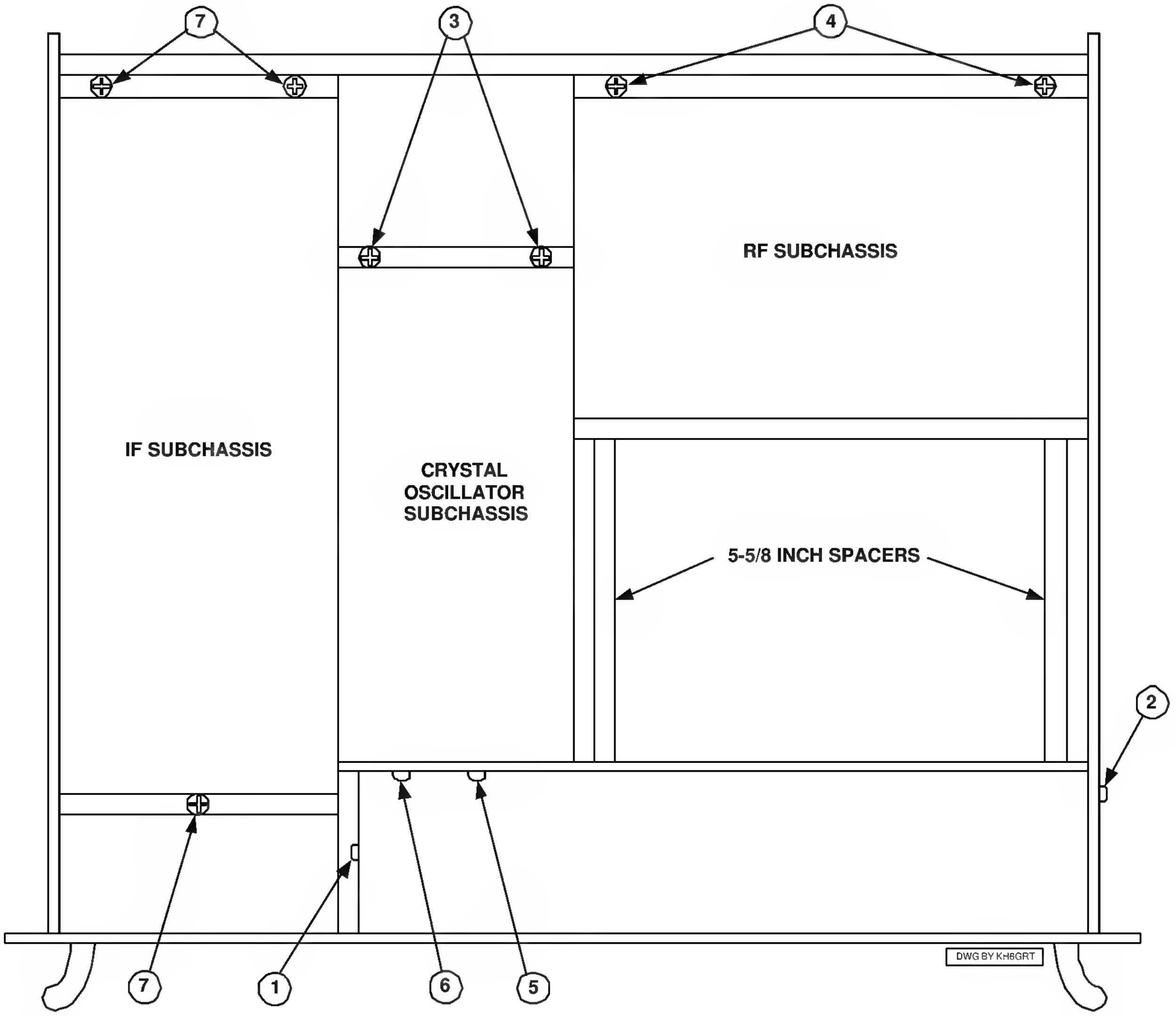

Figure 6-10 RF, IF and Crystal Calibrator Subchassis - Removal and Replacement, Location of Screws[8]

[8] Courtesy of Pete Wokoun, KH6GRT

6.3.4 Removal and Replacement of RF Subchassis Parts.

6.3.4.1 Slug Racks and Tension Springs.

1. **1. Removal.**
   a. Use a spring puller to disengage the tension springs (figure 6-14). Temporarily secure the tension springs to the gear and cam plates.
   b. Lift each slug rack straight up out of the coils and tag it for identification.

⇒ Caution:	Handle the slug racks carefully to prevent damage to the iron cores.

2. **2. Replacement.**
   a. Reinsert each slug into the same coils from which it was removed to prevent severe misalignment of the receiver.
   b. Reengage the tension springs to the holes at the ends of each slug rack.
   c. Remove the identification tags.

6.3.4.2 Band Switch Shaft

1. **1. Removal.**
   a. Loosen but do not remove the RF band switch shaft coupler (figure 6-32) at the front end of the band switch shaft (figure 6-20).
   b. Slide the band switch shaft straight back through the hole in the rear of the RF subchassis. Be careful not to disturb the rotor settings of switch wafers S201 through S208 (figures 6-20 and 6-21).

⇒ Caution:	Re careful not to damage the switch wafer rotors or disturb their settings.

2. Replacement.
   a. Slide the band switch shaft into the band switch as far as it will go.
   b. Tighten the band switch shaft coupler clamp.

6.3.4.3 Removal and Replacement of Mechanically Tuned Coils and Transformers. (See figure 6-19.)

1. **1. Removal.**
   a. Remove the slug rack and the tension springs (paragraph 6.3.4.1).
   b. Remove the Phillips-head screw in the bottom of the slug hole.
   c. Pull the coil or transformer straight up from the RF subchassis.
   d. Remove the coil or transformer cover (if necessary) by pressing inward on the tabs on the sides of the cover and lifting the cover off.
2. **2. Replacement.**
   a. Slide the cover down over the coil or transformer until the tabs snap into place.
   b. Plug the coil or transformer into the jacks on the RF subchassis.
   c. Replace the screw in the bottom of the slug hole.
   d. Replace the slug rack and the tension springs (paragraph 6.3.4.2).

6.3.5 Removal and Replacement of Crystal Oven HR202.

(See figure 6-11.) Replacement of crystal oven HR202 does not require removal of the RF subchassis from the main frame.

6.3.5.1 **Removal.**

1. Remove the retaining springs and the clamp that hold the oven in its octal socket.
2. Pull the oven straight up out of its socket.

6.3.5.2 **Replacement.**

1. Insert the oven in its socket. Make sure that the key on its base lines up with the keyway in the octal socket.
2. Replace the retaining springs and the clamp.

6.3.6 Disassembly and Assembly of Crystal Oven HR202 to Replace Crystals.

(See figure 6-11.)

6.3.6.1 **Disassembly.**

1. Loosen but do not remove the screws that secure the oven cover to the oven.
2. Turn the cover to the left (counterclockwise) until it stops, and lift the cover straight up from the body of the oven.
3. Lift the crystal shield out of the oven body.
4. Unplug crystals Y201 and Y203 and remove them.

6.3.6.2 **Reassembly.**

1. When inserting crystals Y201 and Y203, be sure to plug them in at the proper locations with respect to the key on the base (figure 6-11).
2. Gently push the crystal shield back into place.
3. Line up the slots at the base of the cover with the screws on the base of the crystal oven. -
4. Push the cover down and turn it to the right (clockwise) until it stops.
5. Tighten the securing screws on the base.

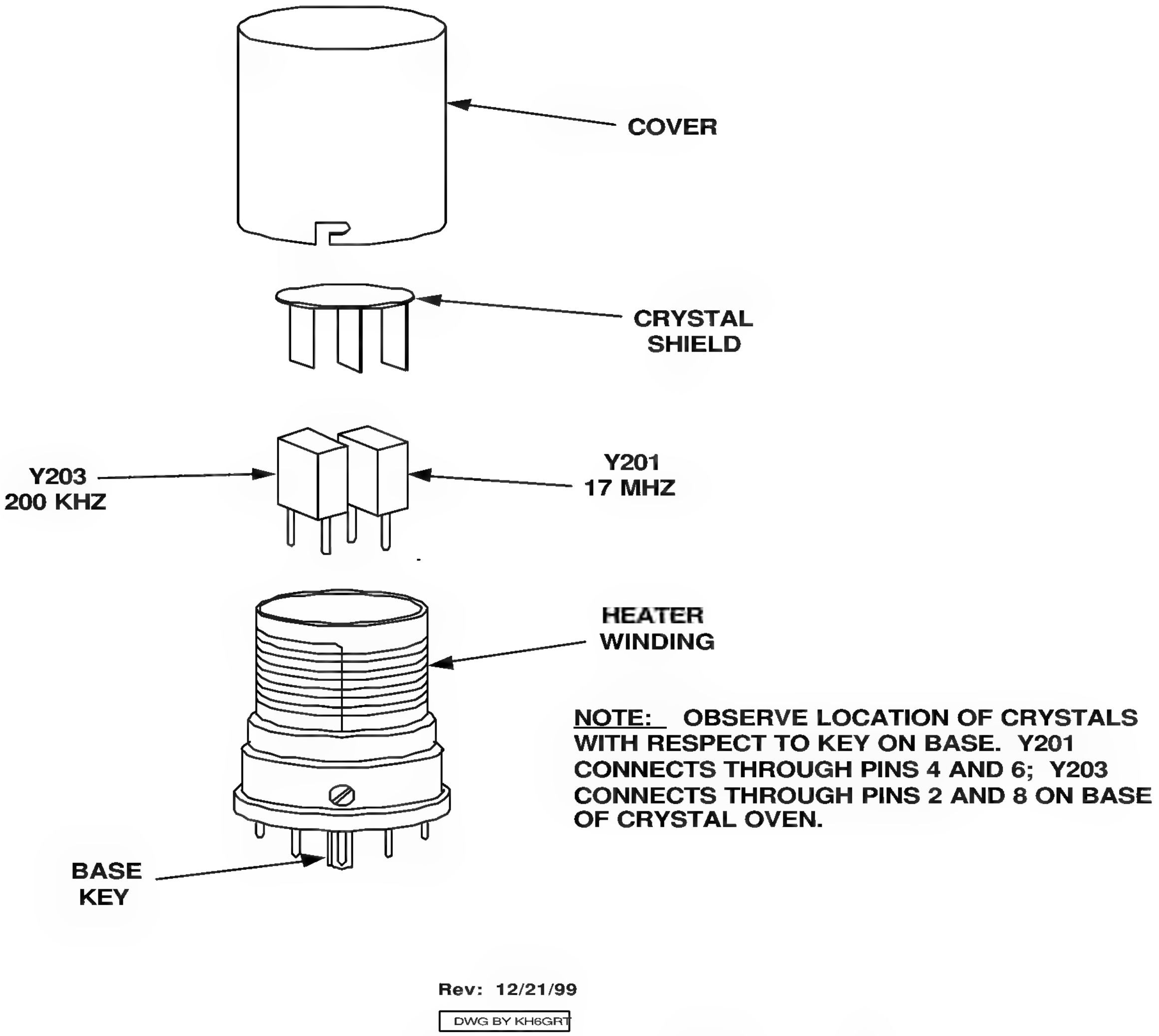

Figure 6-11 Location of Crystals Y201 and Y202[9]

[9] Courtesy of Pete Wokoun, KH6GRT

6.3.7 Removal and Replacement of Crystal-Oscillator Subchassis.

(See figure 6-10.) Two methods can be used for the removal of the crystal-oscillator subchassis. This procedure, however, is for the removal of the crystal-oscillator subchassis when the RF subchassis is to be retained in the main frame of the receiver. When the RF and crystal-oscillator subchassis have been previously removed from the main frame, omit the procedures given in 1, 7, and 9 below.

6.3.7.1 Removal

1. Remove the front panel (paragraph 6.3.2.1).
2. Disconnect plugs P110 and P215 (figure 6-14).
3. Temporarily replace the MEGACYCLE CHANGE knob and turn It until the gears are positioned with their holes lined up with the access hole in the front plate. This makes the 5/16-inch by 6/32 green-headed Phillips screw (5, figure 6-10) accessible.
4. Remove the screw (5) and its lock washer and the two green-headed screws and their lock washers (6). The latter two screws are in a vertical row.
5. Loosen, but do not remove, the shaft coupler set screw on the crystal-oscillator drive shaft (figure 6-14).
6. Loosen the two green-headed captive screws (3, figure 6-10) at the rear of the crystal-oscillator subchassis.
7. Temporarily disconnect plugs P205, P206, and P207 (figure 6-14) to provide enough clearance for subchassis removal.
8. Raise the rear end of the subchassis approximately one-fourth inch, slide the subchassis backward, and lift it out of the main frame.
9. Reconnect plugs P205, P206, and P207.

⇒ Caution:	Be careful not to damage the metal grounding strip that contacts the bottom edges of the RF and the crystal-oscillator subchassis.

6.3.7.2 Replacement.

⇒ Note:	Only even numbers appear on the indicator wheel; odd numbers appear as straight lines; 00 on the frequency indicator appears as 0.

1. Set the crystal-oscillator subchassis dial indicator to 0 and the first two digits of the frequency indicator to 00. Turn the subchassis over and adjust (if necessary) for proper mating of the rotor and the fixed contacts of S401 and S402 (figure 6-23).

⇒ Note:	Adjust the crystal-oscillator shaft at the rear of the crystal-oscillator subchassis when the subchassis is mounted in the main frame. This is done with a long-shafted screwdriver through the SYNC XTAL OSC hole at the rear of the receiver main frame.

2. Temporarily disconnect plugs P205, P206, and P207 (figure 6-14).

⇒ Caution:	Be careful not to damage the metal grounding strip that contacts the bottom edges of the RF and crystal-oscillator subchassis.

3. Place the subchassis in position on the deck of the main frame, and carefully slide it forward and engage the drive shaft.
4. Engage, but do not lock, the two green-headed captive screws at the rear of the subchassis.
5. Tighten the setscrew in the shaft coupler on the crystal-oscillator drive shaft, and be sure that the coupler and gear are pushed against the Oilite® bearing on the subchassis.
6. Replace the three green-headed Phillips screws and their lockwashers (5 and 6, figure 6-10) at the front of the crystal-oscillator subchassis. Long-nosed pliers may be used to hold the screws while starting them.
7. Lock the two green-headed captive screws at the rear of the subchassis.
8. Reconnect plugs P205, P206, P207, P110, and P215.
9. Replace the front panel (paragraph 6.3.2.2).

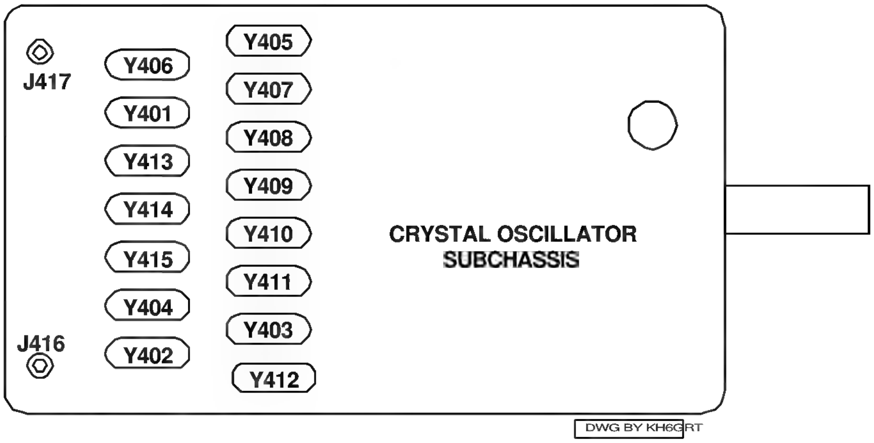

Figure 6-12 Location of Crystals Y401 through Y415[10]

6.3.8 Removal and Replacement of Crystals Under HR401 Crystal Oven Cover.

(See figure 6-12.)

6.3.8.1 **Removal.**

1. Remove the Phillips screw and the lock washer from the top of the subchassis and the two similar screws and lock washers at the rear end of the subchassis.

⇒ **Note:**	Do not loosen the four Phillips screws on top of the oven cover.

2. Lift the cover straight up from the oven.
3. The 15 plug-in crystals, Y401 through Y415, are now accessible for replacement.
4. Pull the defective crystal straight up out of the crystal socket.

6.3.8.2 **Replacement.**

1. Replace the defective crystal.
2. Replace the oven cover. Be sure that the two plugs at the bottom rear of the oven cover line up with their jacks on the subchassis.
3. Replace the three Phillips screws and the lockwashers.

[10] Courtesy of Pete Wokoun, KH6GRT

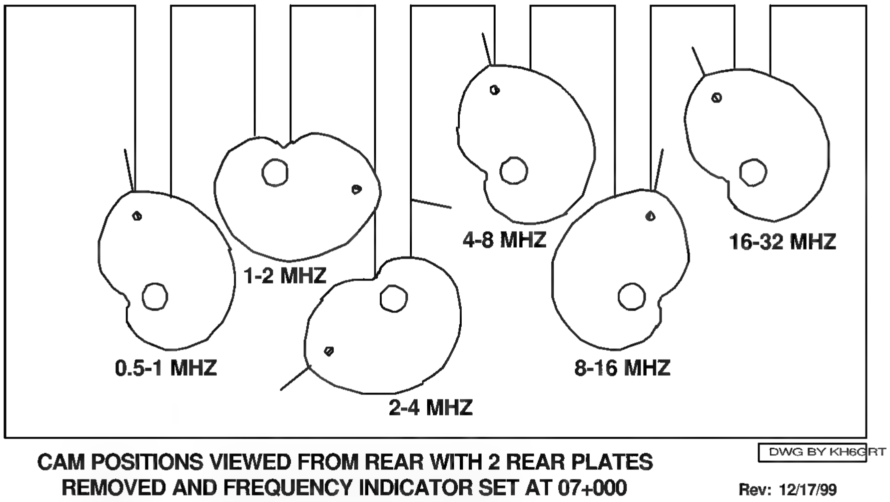

Figure 6-13 RF Gear Train Assembly Cam Positions Viewed From rear, Simplified Mechanical Diagram[11]

6.3.9 Removal and Replacement of IF Subchassis.

Removal of this subchassis does not require the removal of other subchassis or parts except for those connectors that connect to the subchassis.

6.3.9.1 Removal.

1. Set the BANDWIDTH switch to 16 and the BFO PITCH control to 0.
2. Disconnect plugs P112, P116, P213, and P218 (figure 6-14).
3. Loosen the shaft couplers on the BANDWIDTH and BFO PITCH controls (figure 6-32). Slide the knobs and shafts outward.
4. Loosen the three green-headed captive screws (7, figure 6-10) that secure the IF subchassis to the main frame.
5. Lift the IF subchassis out of the main frame.

⇒ **Caution:**	Do not change the settings on the BANDWIDTH and BFO PITCH shafts unless absolutely necessary. If they are moved, reset them when replacing the IF subchassis in the main frame.

[11] Courtesy of Pete Wokoun, KH6GRT

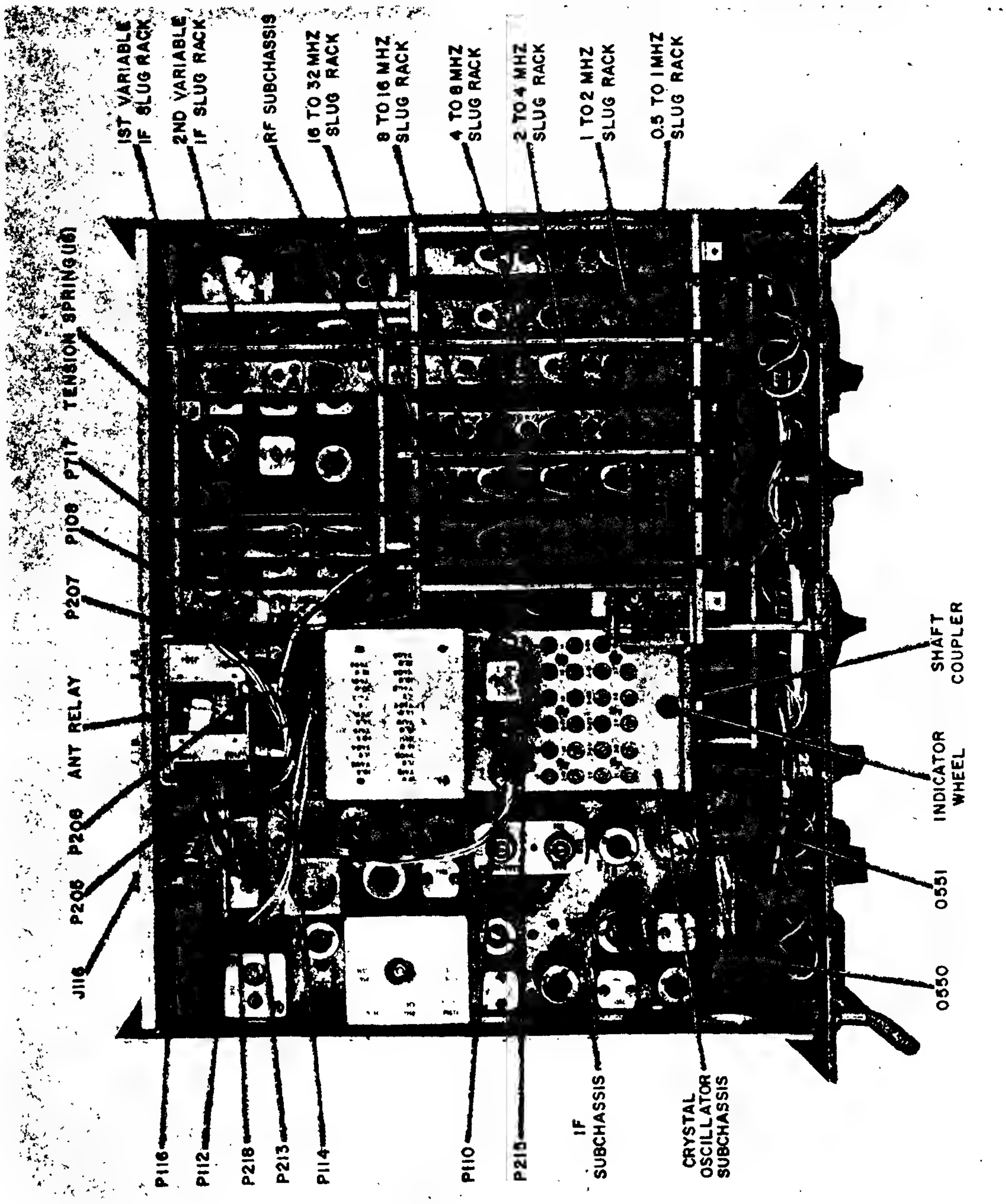

Figure 6-14. Radio Receiver R-390A/URR, Top View

Figure 6-14 Radio Receiver R-390A/URR. Top View

6.3.9.2 Replacement.

Replace the IF subchassis into the main frame of the receiver as follows:

1. Set the IF subchassis into the main frame of the receiver.
2. Engage, but do not lock, the three green-headed captive screws.
3. Slide the shafts and couplers of the BANDWIDTH and BFO PITCH controls forward so that they engage the shafts on the IF subchassis.
4. Before tightening the couplers, set the BANDWIDTH control knob to 16 and the BFO PITCH control knob to 0, and then tighten the couplers.
5. Reconnect plugs P112, P116, P213, and P218.
6. Tighten the three green-headed captive screws.

6.3.10 Removal and Replacement of IF Subchassis Parts.

6.3.10.1 **IF Transformers.** (See figure 6-16.)

IF transformers T501, T502, and T503 are stagger tuned in some models. In other models, T501, T502, and T503 are tuned to 455 kHz. Whenever any one of these transformers is replaced, perform the alignment procedures described in paragraph 6.2.7.

6.3.10.2 **Crystal Filters.**

Serial no. 1 through 413 receivers manufactured by the Electronics Assistance Corp. under contract No. 22137-PC-60 used crystal (ceramic) filters in lieu of mechanical filters. Faulty ceramic filters should be replaced with mechanical types.

6.3.10.3 **Mechanical Filters.**

To install a new mechanical filter, follow the procedures given in steps 1 through 10 below.

⇒ **Note:**	When replacing mechanical filters in the IF subchassis with MOD numbers 1 and above on Order No. 363-Phila-54 and in all receivers on Order No. 14-Phila-56, refer to the procedure in step 10 below. Some receivers bearing Order No. 14-Phila-56 have alternate type filters (paragraph l.5.2b.).

1. After removing the defective filter, remove the small mica capacitors from the filter connection wires. One of these capacitors (C507, C508, C509, or C510) is located beneath the chassis (figure 6-18), the other (C513, C514, C515, or C516) above the chassis (figure 6-16).
2. Install the new filter and resolder the connecting wires to the proper terminals. Do not reinstall the original mica capacitors across the filter terminals.
3. Connect Electronic Multimeter AN/USM-116 ( ) to the DIODE LOAD jack on the front panel and Signal General AN/URM-25 ( ) to ANTENNA UNBALANCED jack J103 on the rear of the receiver.
4. Turn the BANDWIDTH control on the front panel to the position corresponding to the filter being replaced.
5. Tune the AN/URM-25 ( ) and the receiver to the same frequency.
6. The proper replacement value for C507, C508, C509, or C510, and C513, C514, C515, or C516, will be between 56 pF and 130 pF. Lightly solder a random value capacitor within this range across the filter input terminals and another across the output terminals. Do not make a permanent connection.
7. Apply power to the receiver and adjust the AN/URM-25 ( ) output level to

produce 5 volts on the AN/USM-116 ( ). Record the AN/URM-25 ( ) RF output level (microvolts).

8. Try various capacitor values across the input and output terminals. Select the trial values (in pF) from the following list: 56, 62, 75, 82, 91, 100, 110, 120, and 130. Adjust and record the AN/URM-25( ) output level for each trial value.

9. The capacitor values that require the lowest AN/URM-25 ( ) output level (highest gain) for a 5-volt reading of the AN/USM-116 ( ) are the proper values for the replacement filter. Determine these values and solder the capacitors permanently in place. The proper value for the input capacitor is not necessarily identical with the value for the output capacitor. Both values must be determined independently. Replacement capacitors must be the silvered mica type.

10. In IF subchassis with MOD numbers 1 and above on Order No. 363-Phila-54 and in all receivers on Order No. 14-Phila-56, variable trimmer capacitors are provided for tuning the mechanical filters FL502 through FL505. Do not disconnect these capacitors. Connect the AN/URM-25 ( ) and the AN/USM-116 ( ) as in step 3 and adjust the trimmers for maximum gain. The trimmer associated with each filter is listed below in table 6-3.

Table 6-3 - Mechanical Filters and Associated Trimmers

BANDWIDTH (kHz)	MECHANICAL FILTER	INPUT TRIMMER	OUTPUT TRIMMER
2	FL502	C567	C568
4	FL503	C566	C569
8	FL504	C565	C570
16	FL505	C564	C571

6.3.11 Removal and Replacement of VFO Subchassis.

(See figure 6-15.) Removal of this subchassis does not require the previous removal of any other subchassis. Handle this subchassis carefully to prevent damage or misalignment.

⇒ **Note:**	To prevent misaligning the VFO, avoid turning the VFO subchassis shaft or the KILOCYCLE CHANGE shaft on the RF gear train assembly. If the KILOCYCLE CHANGE shaft must be turned, record the setting and be sure to return it to the same setting before replacing the VFO. Do not disturb the Oldham coupler shaft clamps.

6.3.11.1 **Removal.**

1. Remove the Oldham coupler antibacklash spring on the VFO subchassis drive shaft and place it in a tray for safekeeping.
2. Turn the KILOCYCLE CHANGE control so that one slot in the Oldham coupler is vertical and the other is horizontal.
3. Loosen the three green-headed captive screws (figure 6-15) that secure the subchassis.
4. Loosen, but do not remove, the two Phillips screws that secure the triangular bracket at the rear of the VFO subchassis. This is done to provide extra clearance for the removal of the subchassis.
5. Disconnect plugs P109 (figure 6-15) and P717 (figure 6-14).
6. Carefully remove the VFO subchassis from the main frame. The coupler guide of the Oldham coupler (figure 6-4) will fall free. Place it in a tray with the antibacklash spring for safekeeping until the VFO subchassis is to be replaced.

6.3.11.2 **Replacement.**

Replace the VFO subchassis as follows:

1. Smear a little grease on the coupler guide of the Oldham coupler and press it in place against the first coupling of the VFO drive shaft of the RF gear train tuning assembly.
2. Lower the VFO subchassis into position in the main frame and engage the Oldham coupler; at the same time, engage, but do not lock, the three green-headed captive screws. Replace the Oldham coupler antibacklash spring.
3. Tighten the two Phillips-head screws that secure the triangular-shaped bracket at the rear of the VFO subchassis.

4. Tighten the three green-headed captive screws.
5. Reconnect plugs P109 and P717.
6. Check the frequency of the VFO (paragraph 6.2.5.6) if the shaft on the VFO has been turned from its original settings.

⇒ **Note:**	Remating the Oldham coupler will accurately reposition the VFO shaft.

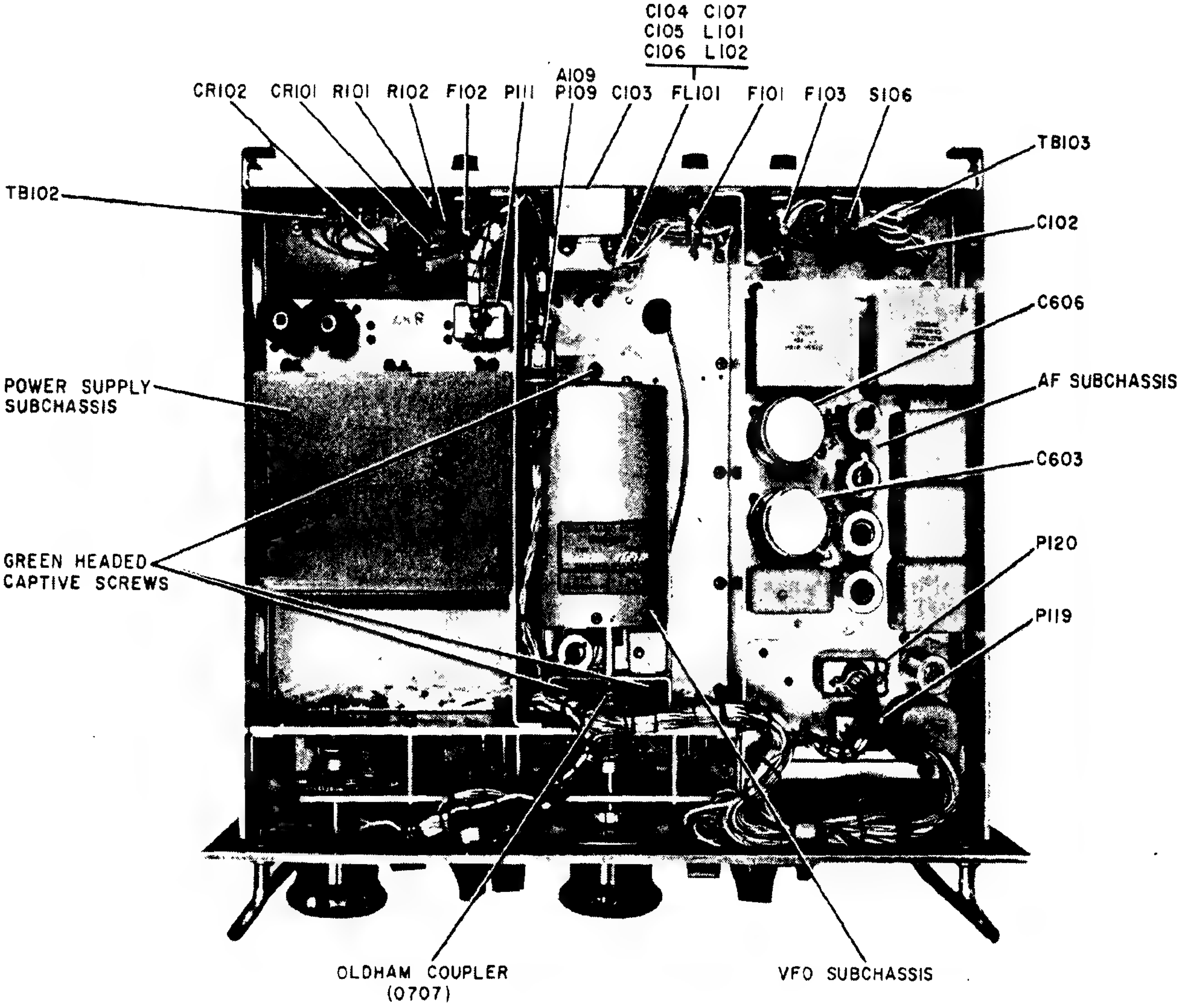

Figure 6-15. Radio Receiver R-390A/URR, Bottom View

Figure 6-15 Radio Receiver R-390A/URR, Bottom View

6.3.12 Removal and Replacement of VFO Subchassis Parts.

(See figure 6-25.)

6.3.12.1 External Cover.

1. **1. Removal.**
   a. Remove the VFO subchassis (paragraph 6.3.11.1).
   b. Remove the two Phillips-head screws that secure the J709 mounting bracket.
   c. Remove the three Phillips-head screws and lockwashers spaced 1200 around the front edge of the external cover.
   d. Remove the J709 cable clamp.
   e. Slide the external cover back slowly until it is disengaged from the heater winding cover.
2. **2. Replacement.**
   a. Slide the external cover into place, and line up the three holes spaced 120°. Be sure that the two J709 mounting bracket holes are in a horizontal plane.
   b. Replace and secure the three Phillips-head screws and lockwashers.
   c. Replace and secure the J709 mounting bracket.
   d. Replace and secure the J709 cable clamp
   e. Replace the VFO subchassis (paragraph 6. 3.11.2).

6.3.12.2 Heater Winding Cover.

1. Removal.

a. Remove the external cover (paragraph 6.3.12.1(1)) above.
b. Carefully remove the insulating sleeve from the heater winding cover.
c. Remove the three Phillips-head screws spaced 120° around the front edge of the heater winding cover.
d. Unsolder the two heater winding leads from the VFO subchassis terminals. Tag them for identification.
e. Slide the heater winding cover back slowly until it is disengaged from the sealed inner cover. Do not remove the sealed inner cover.
f. Note the position of the compartment slot and the thermostat alignment pin before sliding the thermostat out of the heater winding cover.

2. Replacement.

a. Slide the thermostat into the new winding cover. Position the thermostat as in 1.f. above.

b. Slide the heater winding cover into place; line up the three holes spaced 1200; replace the three Phillips-head screws.

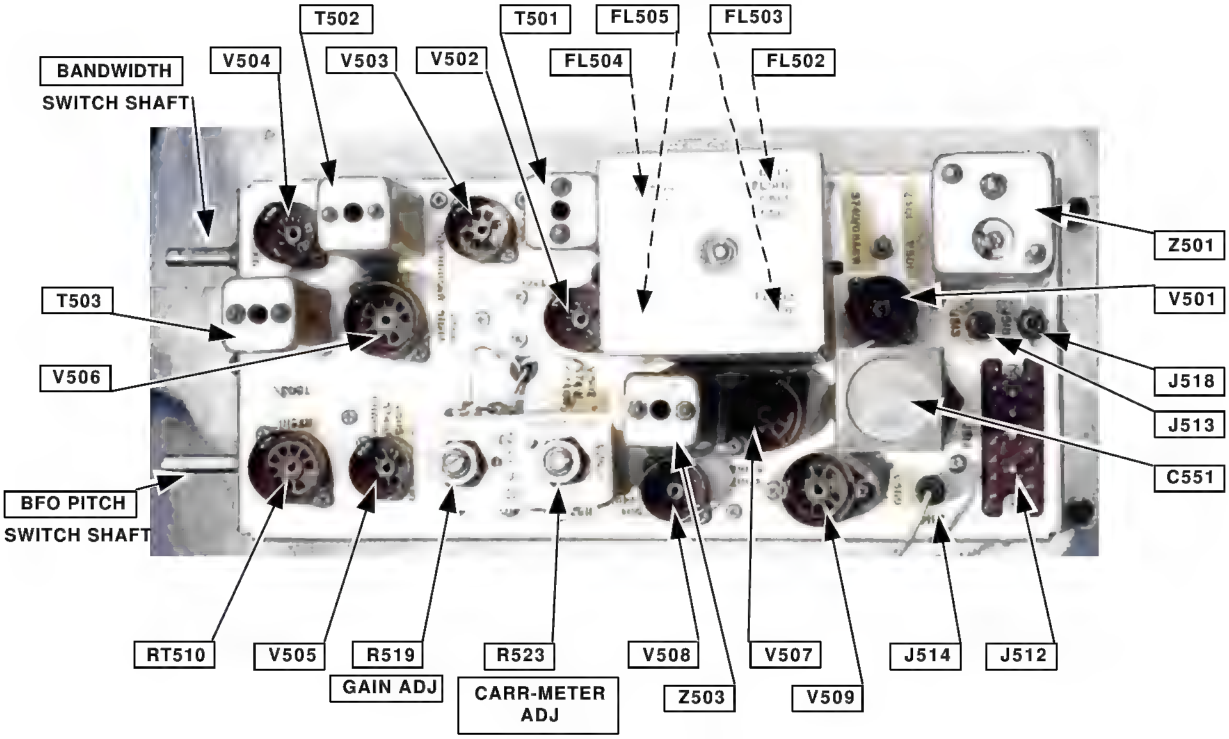

Figure 6-16 IF Subchassis, Top View[12]

[12] Photo courtesy of Dan Arney, Annotatiuon courtesy of Pete Wokoun, KH6GRT

6.3.13 Power-Supply Subchassis Removal and Replacement.

Removal and replacement of the power-supply subchassis does not require the removal or replacement of other subchassis or parts in the receiver, except for plug P111.

6.3.13.1 Removal.

1. Disconnect plug P111.
2. Loosen the six green-headed captive screws that fasten the subchassis to the main frame of the receiver.
3. Withdraw the subchassis from the receiver.

6.3.13.2 Replacement.

1. Carefully lower the power-supply subchassis into the receiver.
2. Engage the six green-headed screws that fasten the subchassis to the main frame of the receiver. Tighten each of the screws.
3. Reconnect plug P111.

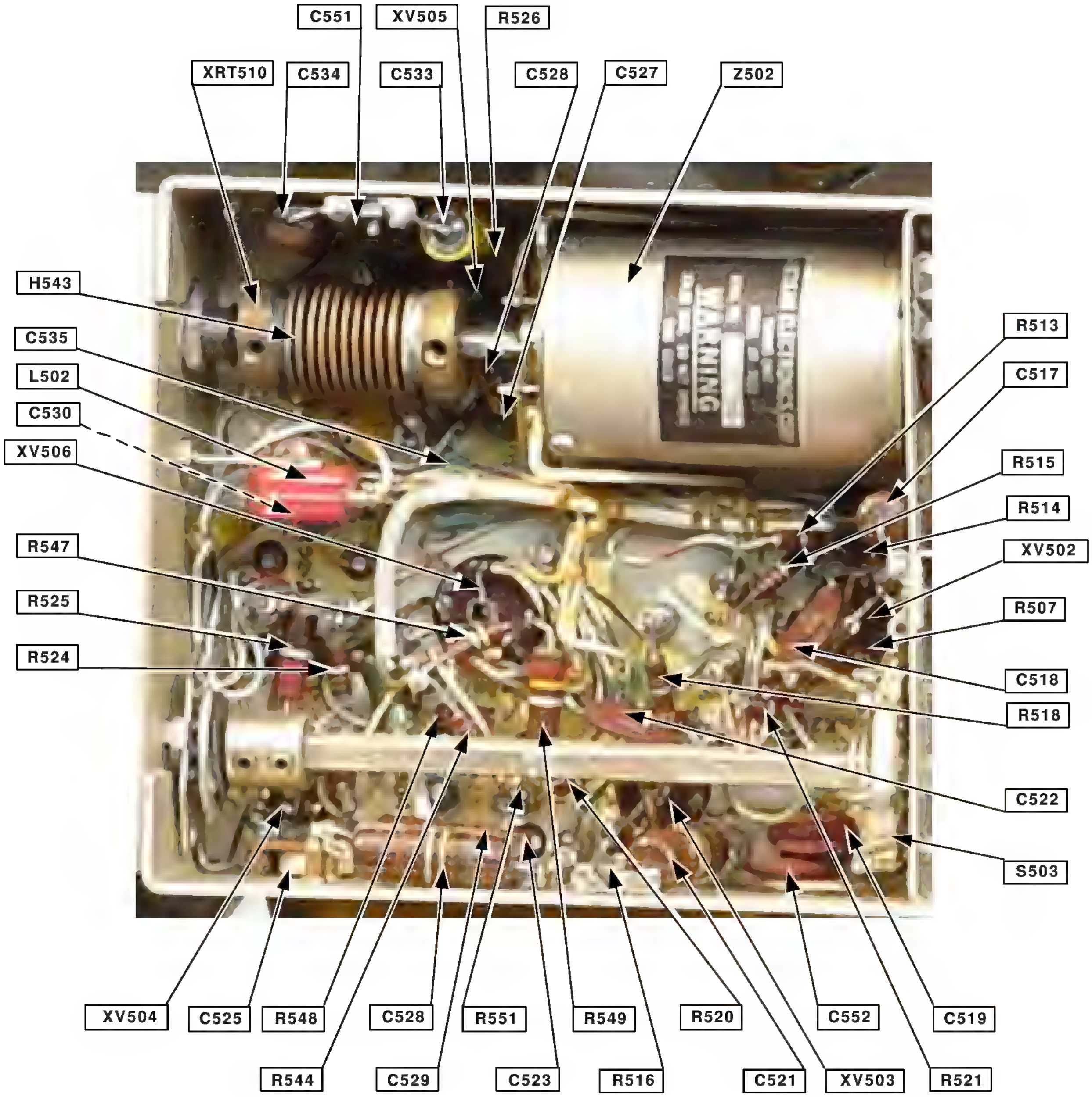

Figure 6-17 IF Subchassis, Front Section[13]

[13] Photo courtesy of Dan Arney, Annotation courtesy of Pete Wokoun, KH6GRT

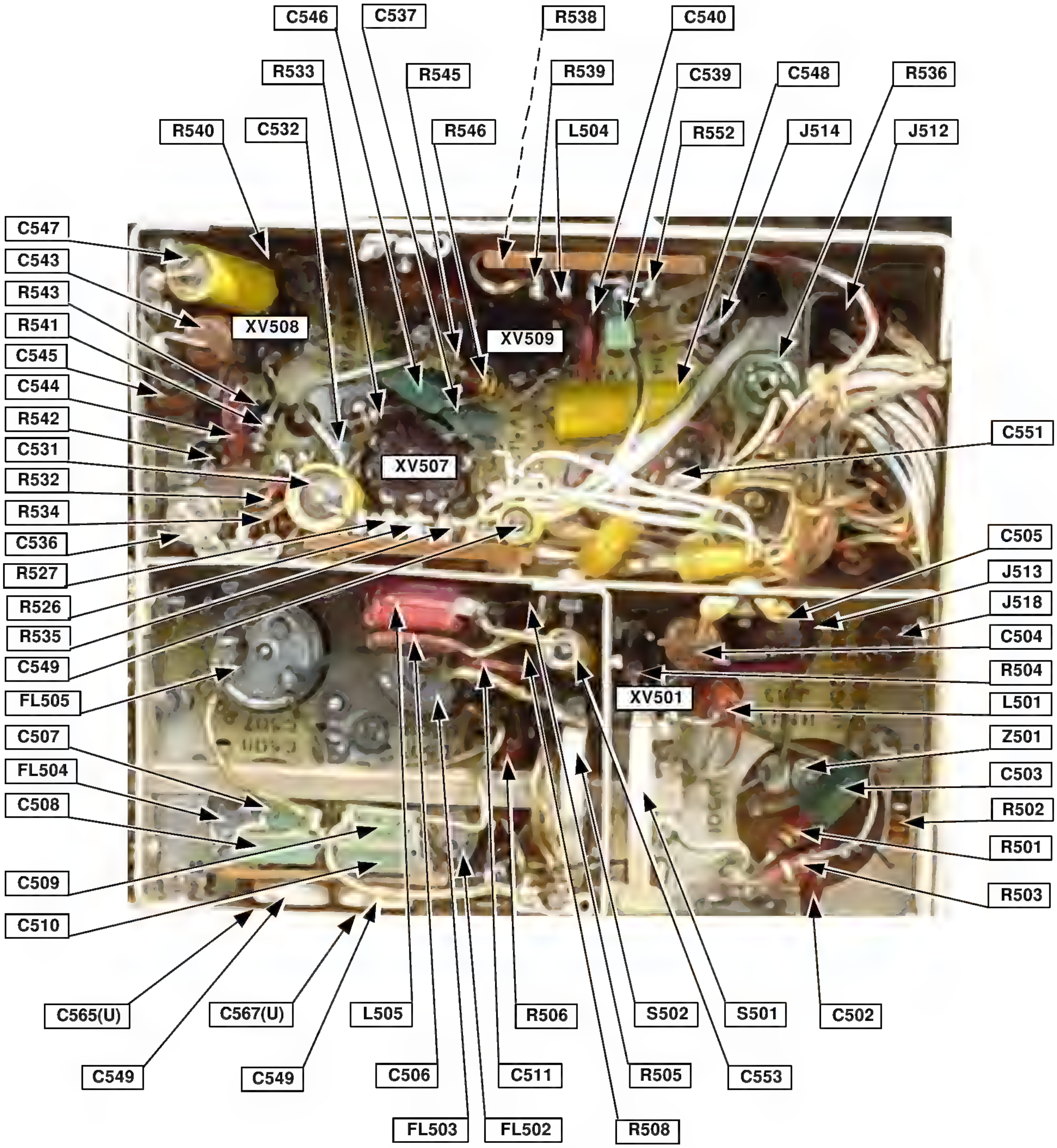

Figure 6-18 IF Subchassis, Rear Section[14]

[14] Photo courtesy of Dan Arney, Annotation courtesy of Pete Wokoun, KH6GRT

6.3.14 AF Subchassis Removal and Replacement.

The AF subchassis can be removed from the main frame without the removal of other subchassis or parts, with the exception of the cable connectors that connect directly to the AF subchassis.

6.3.14.1 **Removal.**

1. Disconnect plugs P119 and P120.
2. Loosen the four green-headed captive screws that fasten the AF subchassis to the main frame.
3. Lift the AF subchassis from the main frame.

6.3.14.2 **Replacement.**

1. Place the AF subchassis on the main frame.
2. Engage and tighten the four green-headed captive screws.
3. Reconnect plugs P119 and P120.

6.3.15 Removal and Replacement of Incandescent Lamps.

6.3.15.1 **Removal.**

1. Remove the four Phillips screws from the corners of the frequency-indicator window.
2. Move the frequency-indicator window a few inches away from the front panel. Its connecting wires will hold it in position.
3. Remove the defective incandescent lamps.

6.3.15.2 **Replacement.**

1. Insert the new incandescent lamps.
2. Place the frequency-indicator window in position; line up the four screw holes.
3. Replace and tighten the four Phillips screws

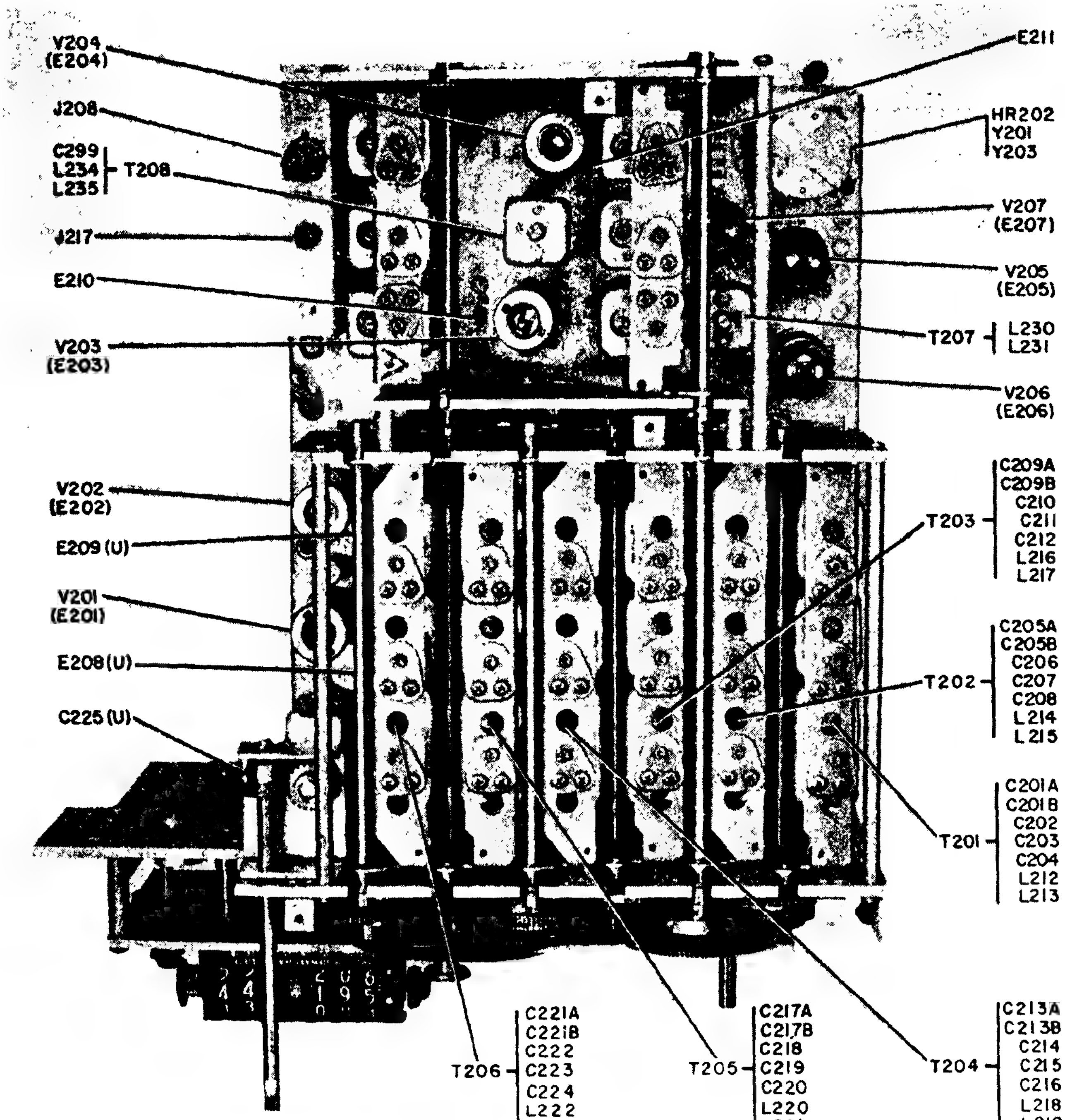

Figure 6-19. RF Subchassis, Top View (Sheet 1 of 2)

Figure 6-19 RF Subchassis, Top View (Sheet 1 of 2)

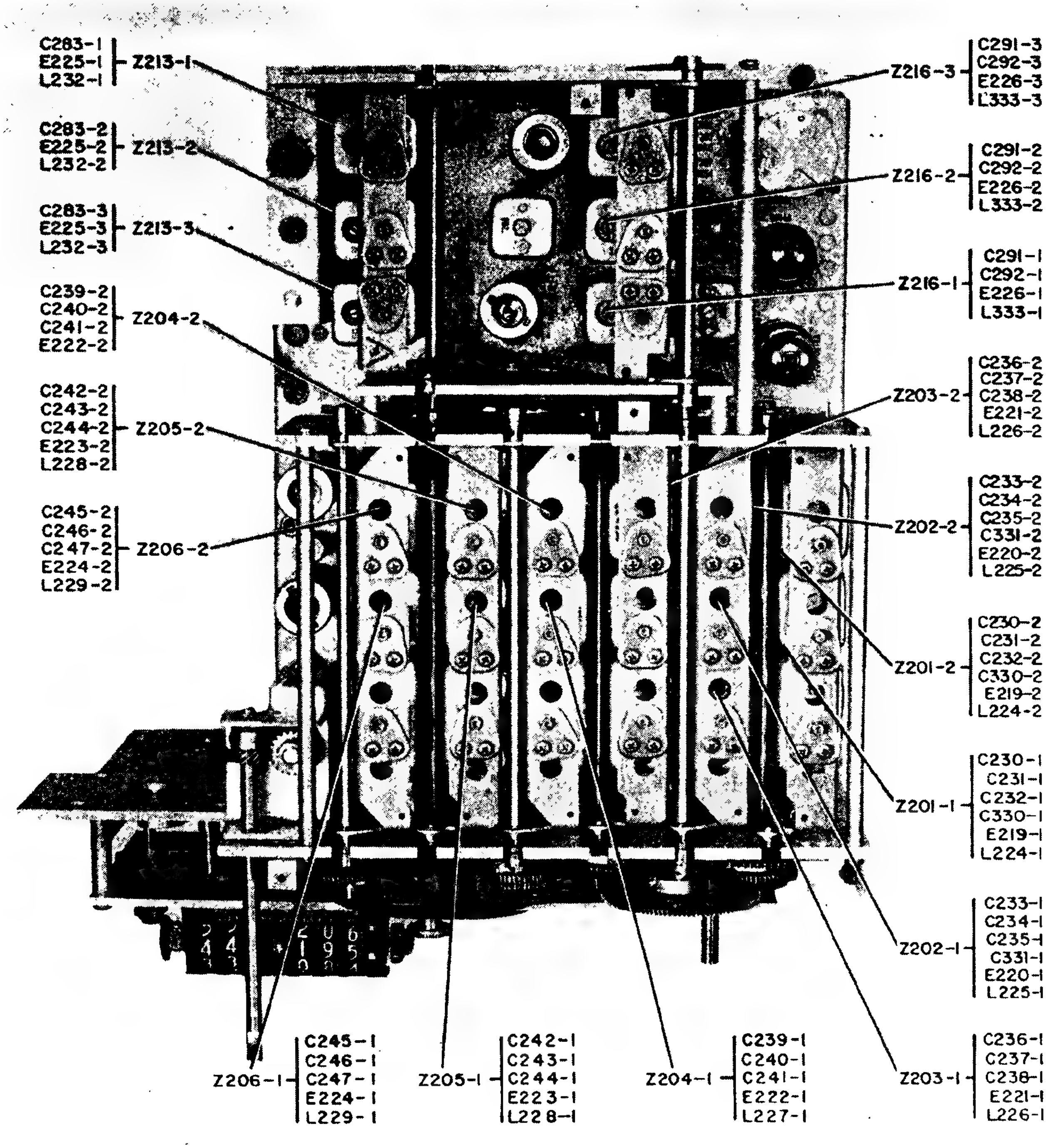

Figure 6-19. RF Subchassis, Top View (Sheet 2 of 2)

Figure 6-19 RF Subchassis, Top View (Sheet 2 of 2)

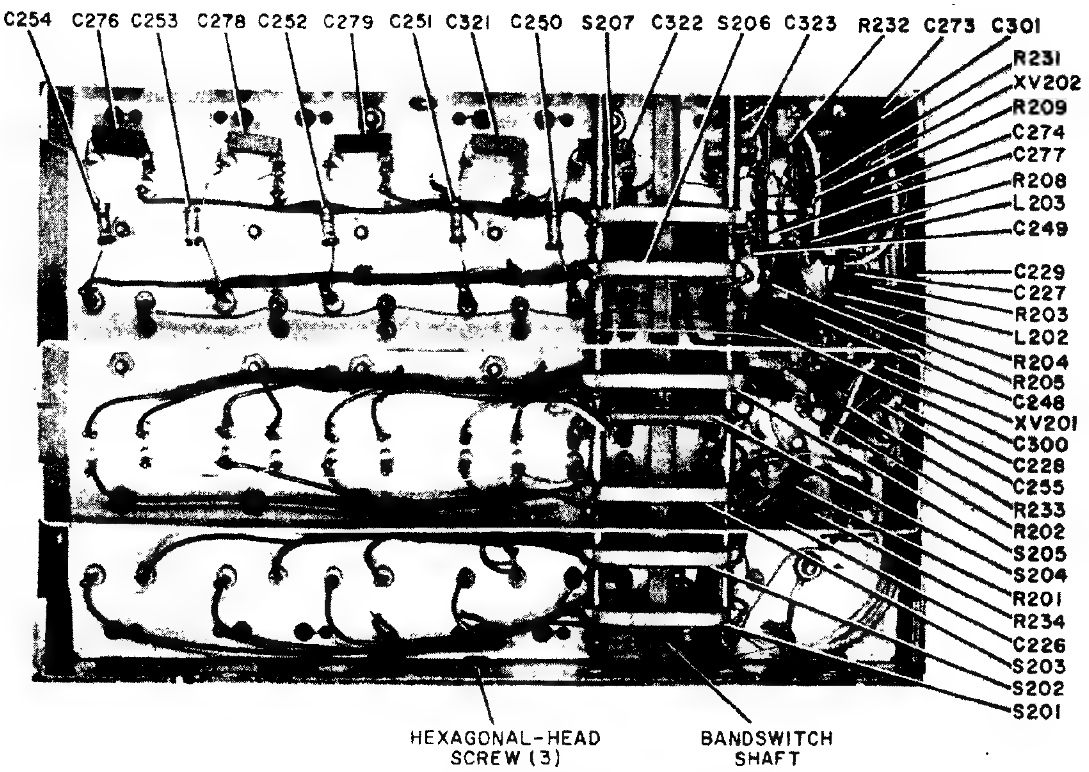

Figure 6-20. RF Subchassis, Front Section

Figure 6-20 RF Subchassis, Front Section

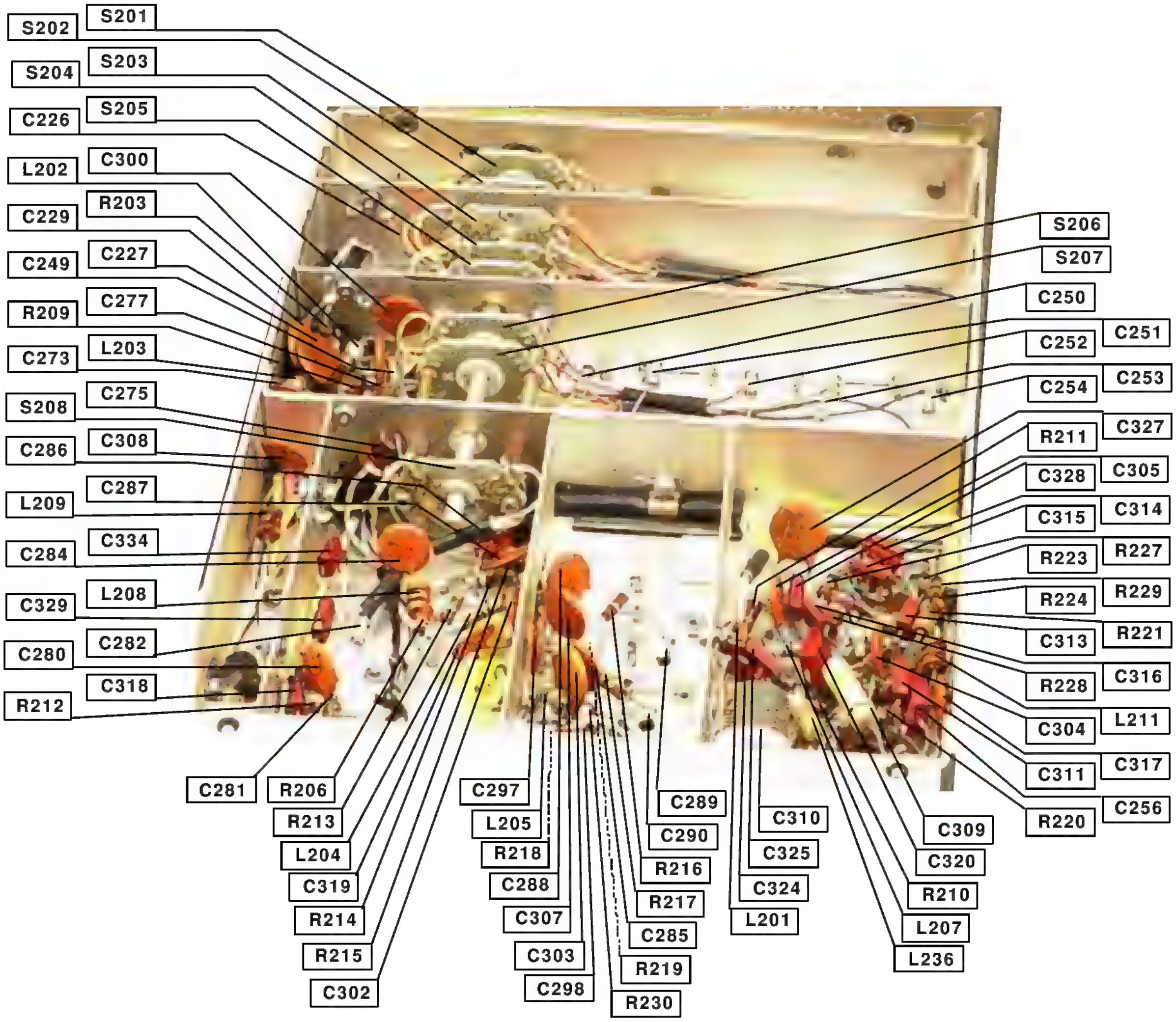

Figure 6-21 RF Subchassis, Bottom View, Rear Section

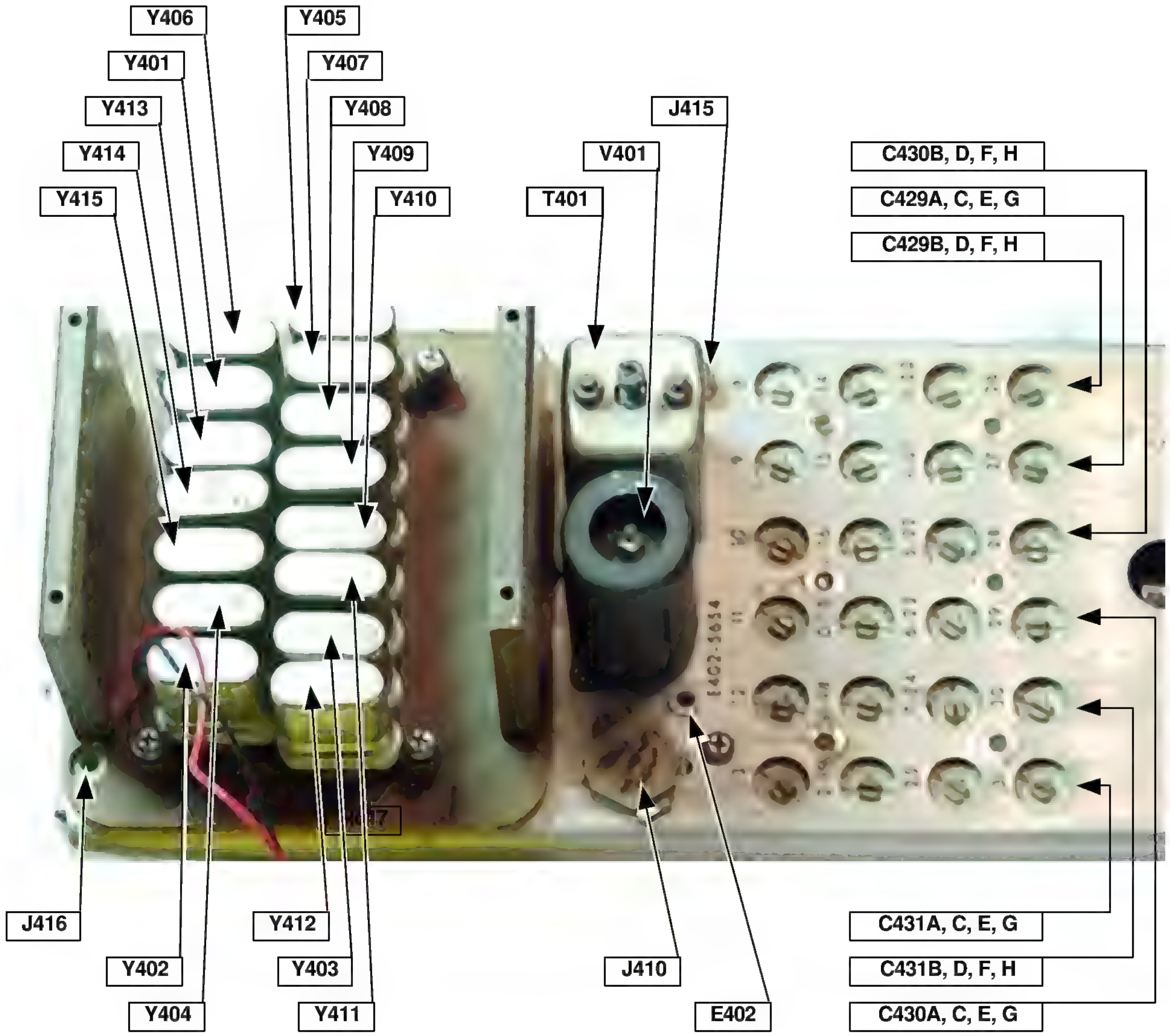

Figure 6-22 Crystal Oscillator Subchassis - Top View[15]

[15] Photo courtesy of Dan Arney, Annotation courtesy of Pete Wokoun, KH6GRT

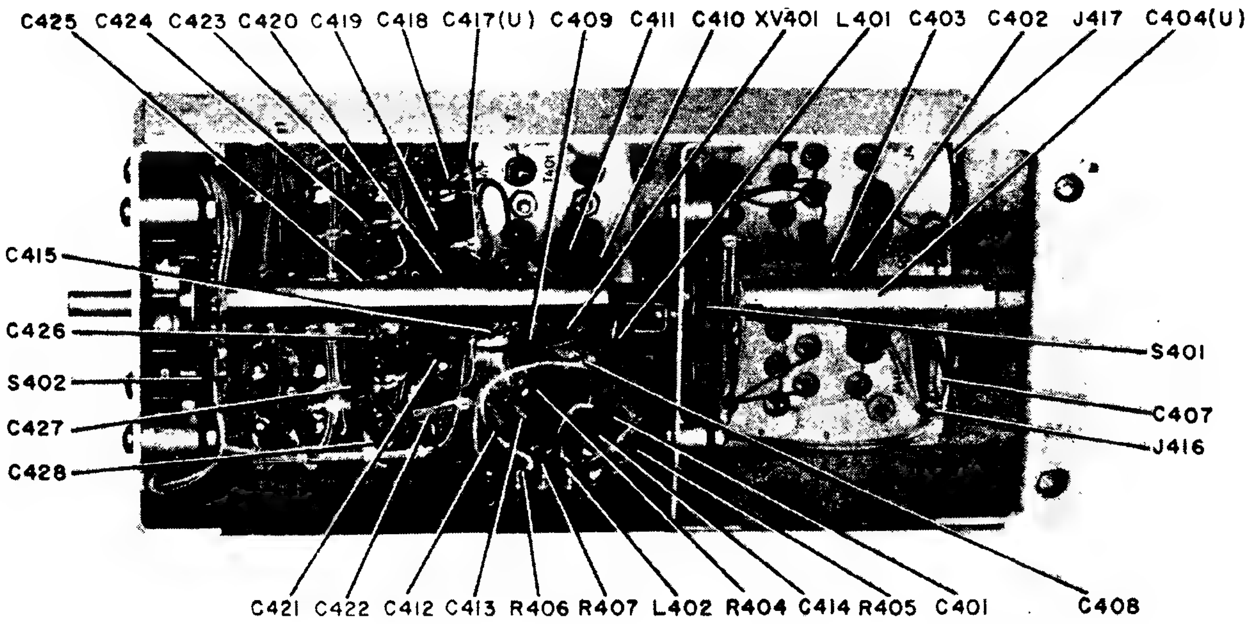

Figure 6-23. Crystal Oscillator Subchassis, Bottom View

Figure 6-23 Crystal Oscillator Subchassis, Bottom View

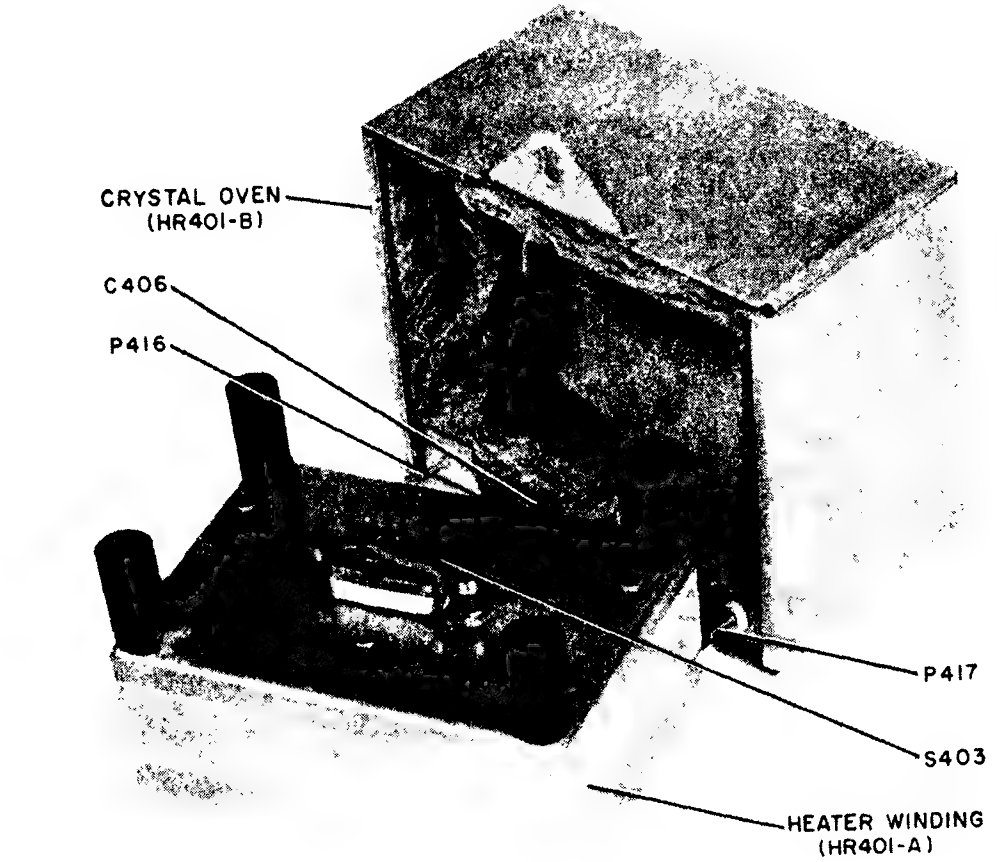

Figure 6-24. Crystal-Oscillator Subchassis, Internal View of Crystal Oven

Figure 6-24 Crystal Oscillator Subchassis, Internal View of Crystals

6.3.16 Disassembly of RF Gear Train Assembly

(See figure 6-36.) Under certain circumstances, such as gear damage, it may be necessary to disassemble and reassemble all or part of the gear train assembly. Do not disassemble parts that can be removed as an assembly unless the defect is in one of the assembly parts. For example, parts no. 1 through 6 of the riveted locking plate assembly need not be disassembled if the defect is in some other portion of the RF gear train assembly. The instructions given should be used as a guide when the method of removal and replacement of parts is not obvious. The numbers used in the instructions refer to those that identify the parts in figure 6-36. When disassembling the RF gear train assembly, lay out the parts in the order of disassembly. This will simplify reassembly. Proceed as follows:

1. Remove the front panel (paragraph 6.3.2.1).
2. Remove the eight slug racks and sixteen tension springs (paragraph 6.3.4.1).
3. Remove the RF subchassis (paragraph 6.3.3.1) and the crystal-oscillator subchassis (paragraph 6.3.7.1).
4. Set the frequency indicator to 07 +000.
5. Loosen the socket-head screw (20) and square nut (5) on the gear clamp (6).
6. Remove the riveted locking plate (1) and spur gear (2). If necessary, separate the riveted locking plate (1) and the spur gear (2) and remove the two rack gear springs (3) (only one shown) and the retaining ring (4).

⇒ **Note:**	When a specific item is to be replaced, follow the disassembly procedures only to the step that results in removal of the item to be replaced. For replacement, start with the step that results in replacement of the item.

7. Remove the four machine screws (19) (only one shown) to remove the mechanical counter.

⇒ **Note:**	It is not necessary to perform procedures 8 and 9 below unless bevel gears (9) and (24) require replacement.

8. Loosen the socket-head screw (7) in the gear clamp (8) to remove the bevel gear (9).
9. If necessary, loosen the socket-head screw (22) in the gear clamp (23) to remove the bevel gear (24).
10. If necessary, loosen the socket-head screw (100) and square nut (98) of the

gear clamp (99) to release the spur gear (93) and washer (92). Pull out the locked clutch gear assembly (21), washer (16), and pressed bevel gear (25).

11. Loosen the socket-head screw (11) to remove the bevel gear (10), gear clamp (15), and gear bushing (14).
12. If necessary, remove the front pressed coupling of the Oldham coupler (figure 6-4).
13. Loosen the six binder-head screws (13) and (30) (only two shown), six split lockwashers (12) and (31) (only two shown), one special screw (28), and split lockwasher (29). Pull the front gear plate (32) forward to remove it.
14. If necessary, remove the retaining ring (121) and shim washers (122) and (123). Pull out the pinned stop assembly (94).
15. If necessary, remove the E-type retaining ring (85) and the pressed gear (86).
16. If necessary, remove the two machine screws (26) (only one shown) and the staked gear post (27).
17. Remove the pinned gear assembly (74), gear bushing (77), and shim washers (76) from the riveted front gear plate (109).
18. Remove the pinned gear assembly (95) and washers (96).
19. Remove the two binder-head screws (67), split lockwashers (68), and flat washers (69)(only one each shown), to remove the detent spring (70).
20. Lift off the final differential gear assembly (39) from the differential shaft (73).
21. Pull out the pinned gear (110).
22. Remove the retaining ring (41) and the riveted gear (42).
23. Pull out the pinned spur gear (66) with the spur gear (79), gear clamp (77), socket-head screw (27), square nut (80), and gear bushing (78).
24. Loosen the socket-head screw (133) and square nut (131) of the gear clamp (132). Remove the loaded rack gear assembly (129).
25. Loosen the socket-head screw (137) and square nut (135) of the gear clamp (136). Pull out the gear assembly (134).
26. Loosen the socket-head screw (45) and square nut (43) of gear clamp (46). Pull out the soldered rack gear (44). Remove the retaining ring (47). Pull out the gear assembly, which consists of the soldered gear (48), spur gear (49), and two gear rack springs (50).
27. Loosen the socket-head screw (51) and square nut (54) of gear clamp (52). Remove the soldered rack gear (53). Remove the retaining ring (58) and pull out the gear assembly (59).

28. Remove the three machine screws (55)(only one shown). Lift off the 8- to 15-MHz gear (63) with its leading gear (64) and two gear rack springs (65).
29. Loosen the socket-head screw (140) and square nut (138) of gear clamp (139). Pull out the loaded rack gear assembly (141).30.

⇒ Caution:	Observe the positioning of the parts (figure 6-2) of the switch gear assembly (87) before attempting to remove it. Be careful not to lose the bearing ball.

30. Loosen the socket-head screw (116) and square nut (114) of gear clamp (115). If necessary, pull out the oscillator spur gear (117), flat washer (113), and oscillator dial hub (124).
31. If necessary, remove the retaining ring (88). Lift off the switch gear assembly (87) as one unit.
32. If necessary, remove the E-type retaining ring (102) and the locking gear (103).
33. Loosen the two setscrews (177) and (178) and remove the retaining ring (176). Slide the antenna trimmer shaft (170) forward to remove the special washer (175), helical gear bushing (174), helical gear clamp (173), helical-driven gear (172), and shaft insulator (171).
34. Loosen the socket-head screw (35) and the square nut (33) of the gear clamp (34). Pull out the idler gear (36) and gear bushing (37). Remove the retaining ring (125) and shaft sleeve (38) if necessary.
35. Loosen the socket-head screw (82) and the square nut (84) of the gear clamp (83). Slide the megacycle gear (90) and the soldered megacycle gear (91) off the RF stop assembly (101). To separate items (90) and (91), remove the retaining ring (81) and the multiturn gear springs (89).
36. Remove the retaining ring (106) and washers (105 and 104). Pull out the RF stop assembly (101).

6.3.17 Disassembly of Camshaft Assemblies.

(See figure 6-36.)

⇒ **Caution:**	Mark each cam and camshaft for identification before removing it. If it is necessary to disassemble the camshaft assemblies, perform the procedures given in paragraph 6.3.16 and proceed as follows:

1. Slide the band switch shaft (figure 6-20) to the rear to clear the riveted front gear plate (109).
2. Mark the pressed rear plate (180) at the points of the two soldered RF cams (185) and (187).
3. Remove the two taper pins (186) and (188) and pull the soldered RF cams (187) and (185) off the camshafts (184) and (183).
4. Remove the three hexagonal-head screws (figure 6-20).
5. Remove the three Phillips-head screws (not shown) that secure the pressed rear plate (180) to the RF amplifier subassembly.
6. Remove the flathead machine screw (127) and the machine screw (182) and split lockwasher (181) that secure the long post (156).
7. Slide the pressed rear plate (180) to the rear to remove it.
8. Remove the two Phillips-head screws, two lockwashers, and two nuts (not shown) from the two cam plate brackets (118) (only one shown). The Phillips-head screws secure the RF gear grain assembly to the RF amplifier subassembly.
9. Separate the RF amplifier subassembly from the RF gear train assembly.
10. Remove the six flathead machine screws (126) (only one shown) from the three short posts (152) (only one shown). Remove the pressed auxiliary cam plate (179).

⇒ **Note:**	The camshafts can now be removed in any order. Go directly to the step that results in the removal of the camshaft or the cams to be replaced. Mark the pressed cam plate (149) at the points of the cams before removal.

11. Remove the taper pin (158) from the soldered RF cam (157). Slide the 0.5- to 1-MHz camshaft (164) straight forward to remove it. Remove taper pin (57) to release soldered RF cam (56).
12. Remove taper pin (154) from the soldered RF cam (153). Slide the 1- to 2-MHz camshaft (184) straight forward to remove it. Remove taper pin (147) to release soldered RF cam (146).
13. Remove taper pin (159) from soldered RF cam (162). Slide the 2- to 4-MHz camshaft (163) straight forward to remove it. Remove taper pin (61) to release soldered RF cam (60).
14. The 4- to 8-MHz camshaft assembly and the 16- to 32-MHz camshaft assembly are Identical; each consists of camshafts (168) and (169), soldered RF cams (142) and (144) secured by taper pins (143) and (145), and soldered RF cams (155) and (165) secured by taper pins (166) and (167). Disassemble by removing the taper pin from each cam.
15. Remove the taper pin (161) from the soldered RF cam (160). Slide the 8- to 16-MHz camshaft (183) straight forward to remove it. Remove taper pin (75) to release the pressed gear assembly (62).
16. To remove the four long posts (148), remove the four Phillips-head screws (151) and four lockwashers (150), four Phillips-head screws (130) and four lockwashers (128). (Only one of each of the numbered items above is shown).

⇒ **Note:**	The four long posts (148) fasten the pressed cam plate (149) to the riveted front gear plate (109).

6.3.18 Reassembly of Camshaft Assemblies.

(See figures 6-2 and 6-36.) When a specific item is to be replaced, go directly to the procedure that results in replacement of the Item and follow the reassembly procedures from that step onward.

1. To fasten the pressed cam plate (149) to the riveted front gear plate (109), replace the four long posts (148), four machine screws (151), four lockwashers (150), four Phillips-head screws (130), and four lockwashers (128). (Only one of each of the numbered Items above Is shown.)

⇒ **Note:**	Figure 6-13 shows the normal positions of the cams viewed from the rear, with the two rear plates removed and the frequency indicator set at 07 + 000.

2. Slide the 8- to 16-MHz camshaft (183) through the holes marked A. Replace the pressed gear assembly (62) and the taper pin (75). Set the point of the cam to the cam positioning mark on the riveted front gear plate. Set the point of the soldered RF cam (160) to the mark previously made on the pressed cam plate (149) and replace the taper pin (161).
3. Slide the 4- to 8-MHz and the 8- to 16-MHz camshafts (168) and (169) through the holes marked B and C. Replace the soldered RF cams (142) and (144) and secure them with the taper pins (143) and (145). Set the points of the cams to the cam positioning marks on the riveted front gear plate. Replace the soldered RF cams (155) and (165). Set the points of the cams to the marks previously made on the pressed cam plate (149). Replace the taper pins (166) and (167).
4. Slide the 2- to 4-MHz camshaft (163) through the holes marked D. Replace the soldered RF cam (60) and taper pin (61). Set the point of the cam to the cam positioning mark. Replace the soldered RF cam (162) and taper pin (159) with the point of the cam set at the mark previously made on the pressed cam plate (149).
5. Slide the 1- to 2-MHz camshaft (184) through the holes marked E. Replace the soldered RF cam (146) and taper pin (147). Set the point of the cam to the cam positioning mark. Replace the soldered RF cam (153) and taper pin (154) with the point of the cam set at the mark previously made on the pressed cam plate (149).
6. Slide the 0.5- to 1-MHz camshaft (164) through the holes marked F. Replace the soldered RF cam (56) and taper pin (57). Set the point of the cam to the cam positioning mark. Replace the soldered RF cam (157) and taper pin (158)

with the point of the cam set at the mark previously made on the pressed cam plate (149).

7. Secure the pressed auxiliary cam plate (179) with the three short posts (152) and six flathead machine screws (126) (only one of each shown).
8. Place the RF amplifier subassembly (figure 6-20) in position to fasten it to the RF gear train assembly. Engage, but do not tighten the two Phillips-head screws (not shown), two lockwashers (not shown), and two nuts (not shown) that fasten the two cam plate brackets (188) to the RF amplifier subassembly.
9. Slide the pressed rear plate (180) forward on the two camshafts (183) and (184) until it is against the rear of the RF amplifier subassembly. Engage but do not tighten the three Phillips-head screws (not shown) that fasten the pressed rear plate (180) to the RF amplifier subassembly.
10. Replace the long post (156) but do not tighten the flathead machine screw (127) and the Phillips-head screw (182) and split lockwasher (181).
11. Replace the three hexagonal-head screws (figure 6-20).
12. Slide the band switch shaft (figure 6-20) forward until its retaining rings rest against the riveted front gear plate (109).
13. Tighten all the screws in the procedures given in 8, 9, 10, and 11 above.
14. Replace the two soldered RF cams (187) and (185) on the two camshafts (184) and (183). Set the points of the cams at the marks previously made on the pressed rear plate (180). Replace the two taper pins (186) and (188).

6.3.19 Reassembly of RF Gear Train Assembly.

(See figure 6-36.)

1. Slide the RF stop assembly (101) into the hole marked G. Replace the two washers (104) and (105) and rotating ring (106). Slide the combination of the soldered megahertz gear (91), megahertz gear (90), two multiturn gear springs (89), gear clamp (83), socket-head screw (82), and square nut (84) on the RF stop assembly. Do not tighten the socket-head screw (82).
2. Push the shaft sleeve (38) into the hole marked H and replace the retaining ring (125), if both have been removed. Slide the gear bushing (37), idler gear (36), and gear clamp (34) on the shaft sleeve (38). Tighten the socket-head screw (35) and square nut (33).
3. Slide the antenna trimmer shaft (170) into the hole marked I. Replace the shaft insulator (171), helical- driven gear (172), helical gear clamp (173), and helical gear bushing (174). Push the antenna trimmer shaft (170) as far as it will go toward the rear. Replace the special washer (175) and retaining ring (176). Mesh the helical-driven gear (172) and its mating gear. Tighten the two

setscrews (177) and (178).

4. If necessary replace the locking gear (103) and E-type retaining ring (102) on the shaft marked K.
5. If necessary, slide the switch gear assembly (87) on the shaft marked J and replace the retaining ring (88). Position the assembly (figure 6-2).
6. If necessary, slide the oscillator dial hub (124) into the hole marked L; then slide the oscillator spur gear (117), flat washer (113), and gear clamp (115) on the hub (124). Replace but do not tighten the socket-head screw (116) and square nut (114).
7. Slide the loaded rack gear assembly (141) on the 16- to 32-MHz shaft (168). Load the assembly (141) two teeth before meshing it with the pressed gear assembly (62). Tighten the socket-head screw (14) and square nut (138) of the gear clamp (139).
8. Place the 8- to 16-MHz gear (63) with its loading gear (64) on the pressed gear assembly (62). Replace the two gear rack springs (65) and the three machine screws (55) (only one shown).
9. Slide the gear assembly (59) on the 2- to 4-MHz camshaft (163) and replace the retaining ring (58). Replace the gear clamp (52), socket-head screw (51), square nut (54), and soldered rack gear (53). Tighten the socket-head screw (51).
10. Slide the gear assembly consisting of soldered gear (48), spur gear (49), and two gear rack springs (50) on the 0.5- to 1-MHz camshaft (164). Replace the retaining ring (47), gear clamp (46), socket- head screw (45), square nut (43), and soldered rack gear (44). Tighten the socket-head screw (45).
11. Slide the gear assembly (134) with gear clamp (136), socket-head screw (137), and square nut (135) on the 4- to 8-MHz camshaft (one of two) (167). Load the gear assembly (134) two teeth before meshing it with the soldered rack gear (53).
12. Slide the loaded rack gear assembly (129) on the 1- to 2-MHz camshaft (184). Load the loaded rack gear (129) two teeth before meshing it with the soldered rack gear (44). Tighten the socket-head screw (133) and square nut (131) of the gear clamp (132).
13. Slide the shaft of the assembly consisting of the pinned spur gear (66), gear clamp (71), socket-head screw (72), square nut (80), spur gear (79), and gear bushing (78) into the hole marked M.
14. Replace the riveted gear (42) and retaining ring (41) on the 8- to 16-MHz camshaft (183).
15. Slide the shaft of the pinned gear (110) into the hole marked N.

16. Slide the differential gear assembly (39) on the differential shaft (73), Load the loaded rack gear assembly (59) two teeth before meshing the final differential gear assembly (39) with it. Load the combination of the megahertz gear (90) and soldered megahertz gear (91), which was assembled in paragraph 6.3.19 step 1. Slide the assembly forward to mesh it with the final differential gear assembly (39). Tighten the socket-head screw (82).
17. Secure the detent spring (70) with the two binder-head screws (67), two flat washers (69), and two split lockwashers (68) (only one of each shown).
18. Slide the shaft of the pinned gear assembly (95) with two washers (96) into the hole marked 0.
19. Slide the shaft of the pinned gear assembly (74) with gear bushing (77) and shim washers (76) into the hole marked P.
20. If necessary, slide the staked gear post (27) into the hole marked U, and replace the two machine screws (26) (only one shown).
21. If necessary, replace the pressed gear (86) and E-type retaining ring (85).
22. Slide (if necessary) the shaft of the pinned stop assembly (94) into the hole marked Q. Replace the shim washers (123) and (122) and retaining ring (121).
23. Slide the front gear plate (32) into place. Replace the six binder-head screws (13) and (30) (only two shown) and six split lockwashers (12) and (31) (only two shown). Secure the special screw (28) and split lockwasher (29) in the hole marked V.
24. Replace the front pressed coupling of the Oldham coupler (figure 6-4).
25. Slide the gear bushing (14), gear clamp (15), and bevel gear (10) onto the shaft of the pinned gear (110). Tighten the socket-head screw (11).
26. Slide the shaft of the locked clutch gear assembly (21), with the washer (16) in place, through the hole marked R. Replace the washer (92), spur gear (93), and gear clamp (99) with socket-head screw (100) and square nut (98). Load the loaded rack gear (part of (21)) two teeth, mesh it with the pressed bevel gear (25), and slide the combination into place. Slide the pressed gear assembly consisting of (92), (93), (99), (98), and (100) forward on the shaft of the locked clutch gear assembly (21) until the spur gear (93) is against the front gear plate (32) and is meshed with the pressed gear (86).
27. If necessary, replace the gear clamp (23) with socket-head screw (22) and bevel gear (24) on the mechanical counter (17) shaft marked T. Tighten the socket-head screw (22).
28. Replace (if necessary) the gear clamp (8) with socket-head screw (7) and bevel gear (9) on the remaining mechanical counter (17) shaft.

29. Set the mechanical counter (17) to 07 + 000. Place the mechanical counter (17) in position and secure the four machine screws (19) (only one shown).
30. Replace (if necessary) the two rack gear springs (3) (only one shown) and retaining ring (4). Slide the gear clamp (6) with socket-head screw (20) and square nut (5) on the hub of the spur gear (2). Load the spur gear (2) two teeth and slide it on the pinned stop assembly (94) until the spur gear (2) meshes with the front gear of the locked clutch gear assembly (21).
31. Replace the crystal-oscillator subchassis (paragraph 6.3.7 2) and the RF subchassis (paragraph 6.3.3.2).
32. Check the mechanical and electrical synchronization (paragraph 6.2.5).
33. Replace the eight slug racks and sixteen tension springs (paragraph 6.3.4.1).
34. Replace the front panel (paragraph 6.3.2.2).

6.4 Parts Location.

The physical location of major components and detail parts is illustrated in figures 6-14 through 6-33. In addition, zoning indexes are provided with each sheet of the schematic diagram as an aid in locating detail parts. The zoning index precedes the applicable figure. Zoning Indexes are also provided for the power distribution diagram, figure 5-11, the signal flow diagram, figure 5-12, and the RF gear train diagram, figure 6-36.

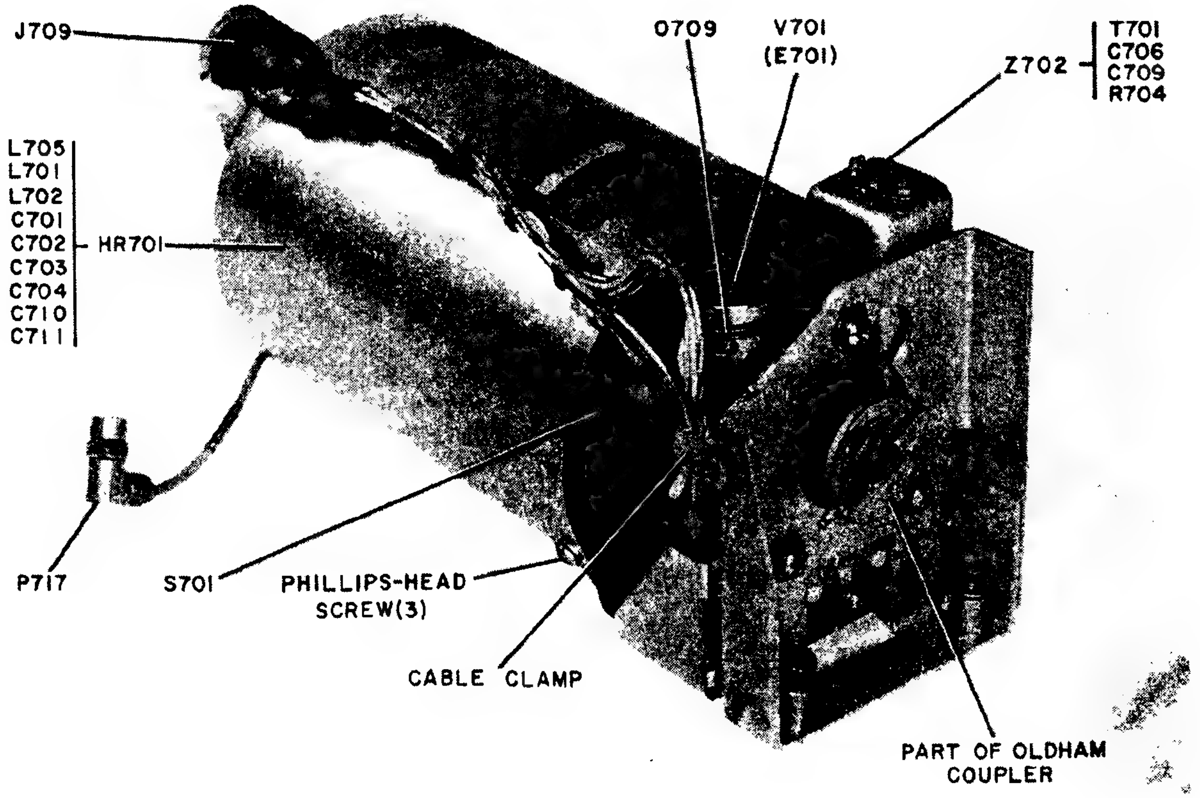

Figure 6-25. VFO Subchassis, Top View

Figure 6-25 VFO Subchassis, Top View

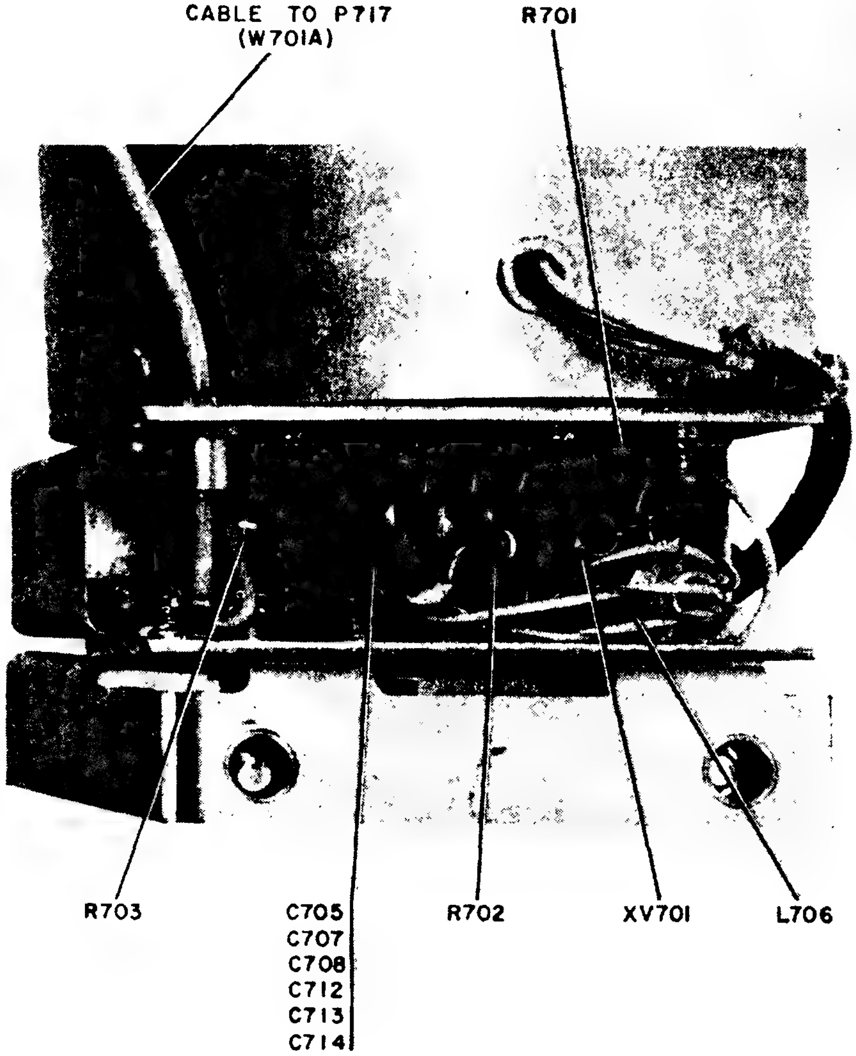

Figure 6-26. VFO Subchassis, Bottom View

Figure 6-26 VFO Subchassis, Bottom View

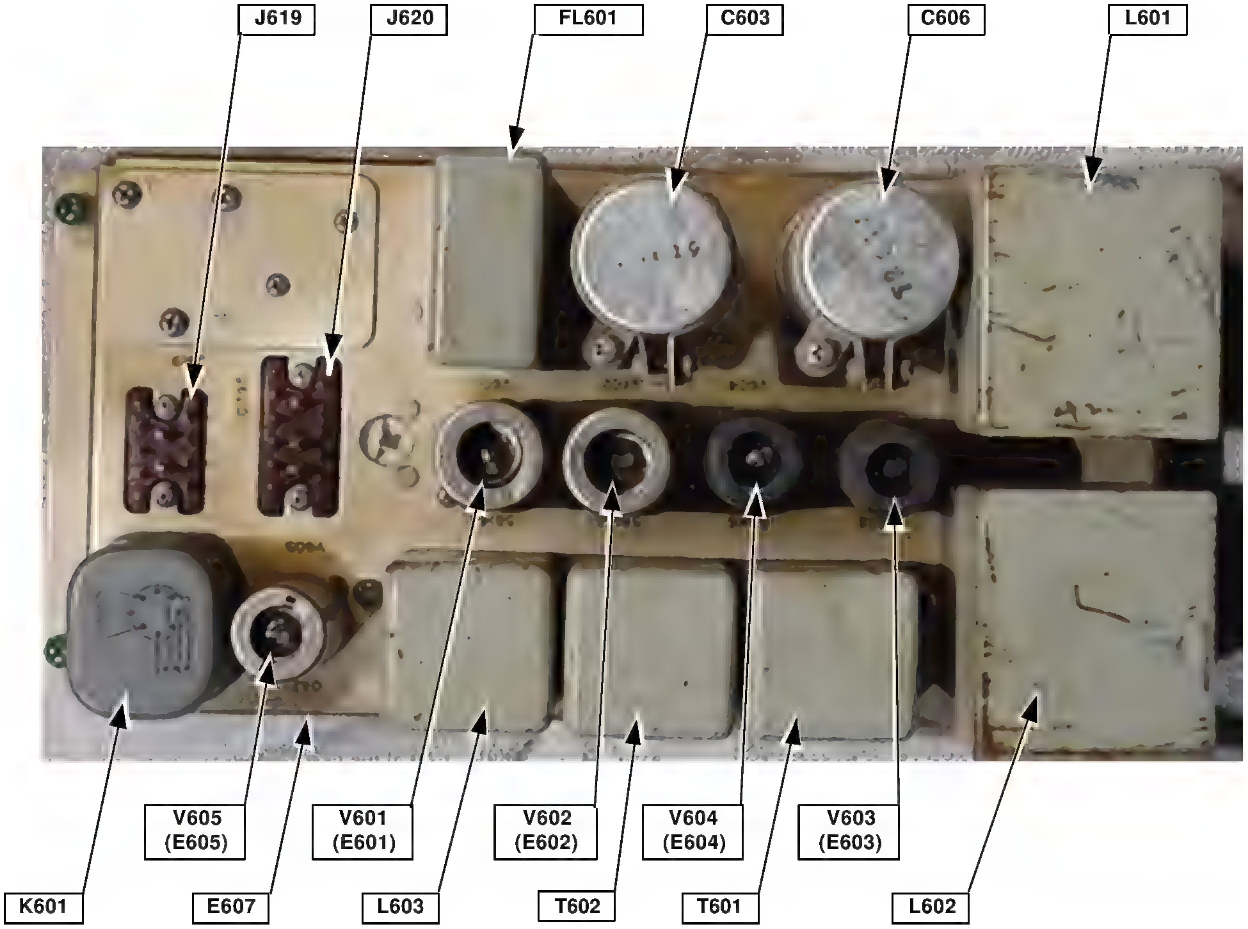

Figure 6-27 AF Subchassis, Top View[16]

[16] Photo courtesy of Dan Arney, Annotatiuon courtesy of Pete Wokoun, KH6GRT

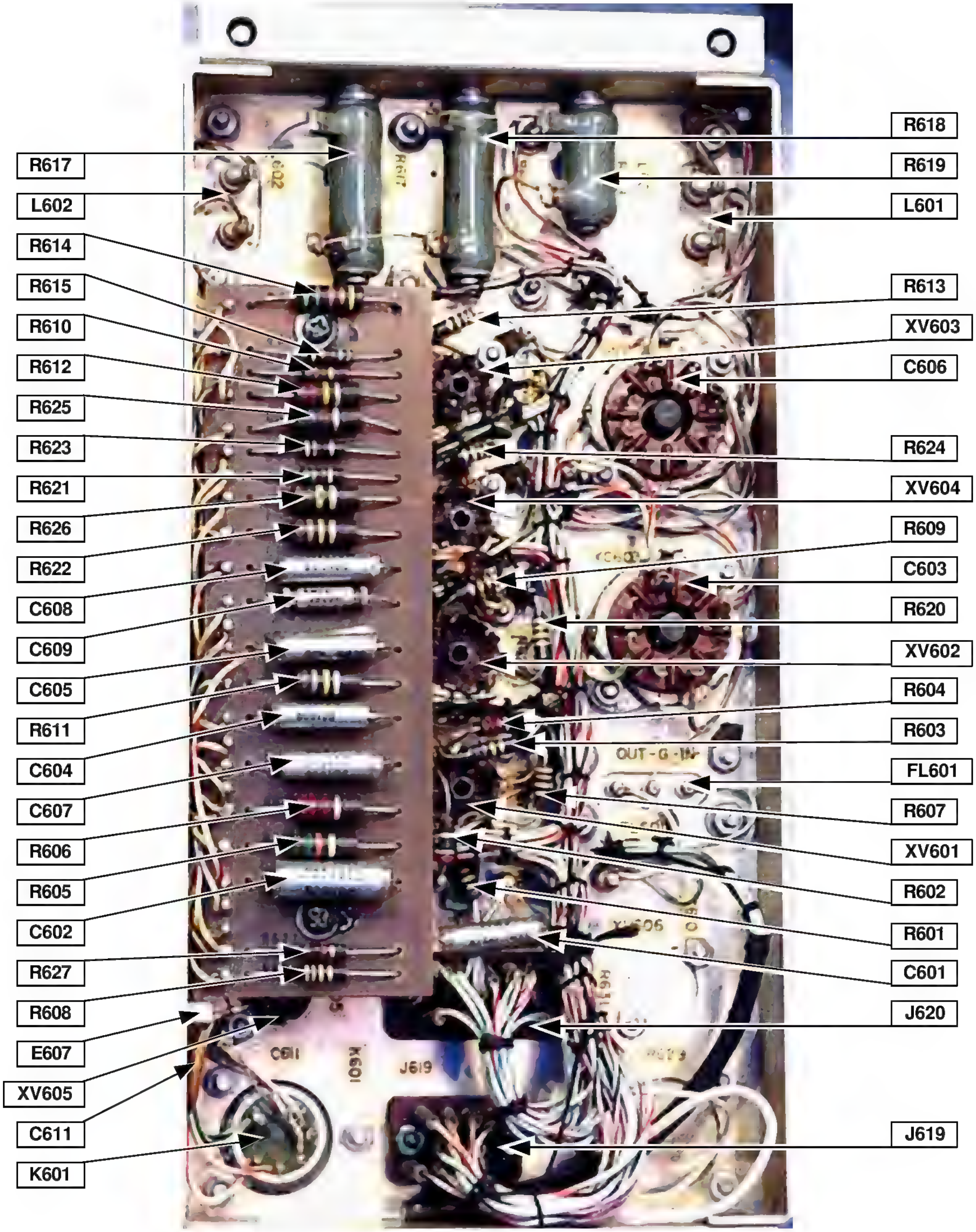

Figure 6-28 AF Subchassis, Bottom View[17]

[17] Photo courtesy of Dan Arney, Annotatiuon courtesy of Pete Wokoun, KH6GRT

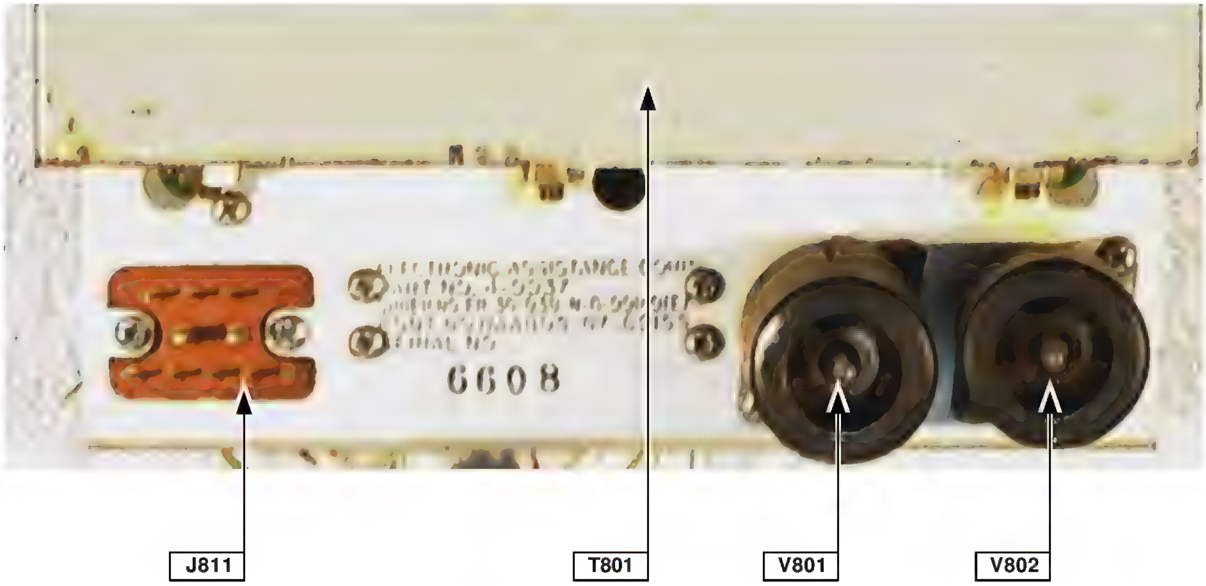

Shown with V801 and V802 replaced with CR801 and CR802 (under sockets) by Field Change 6.

Figure 6-29 Power-Supply Subchassis, Top View[18]

[18] Photos courtesy of Dan Arney, Annotatiuons courtesy of Pete Wokoun, KH6GRT

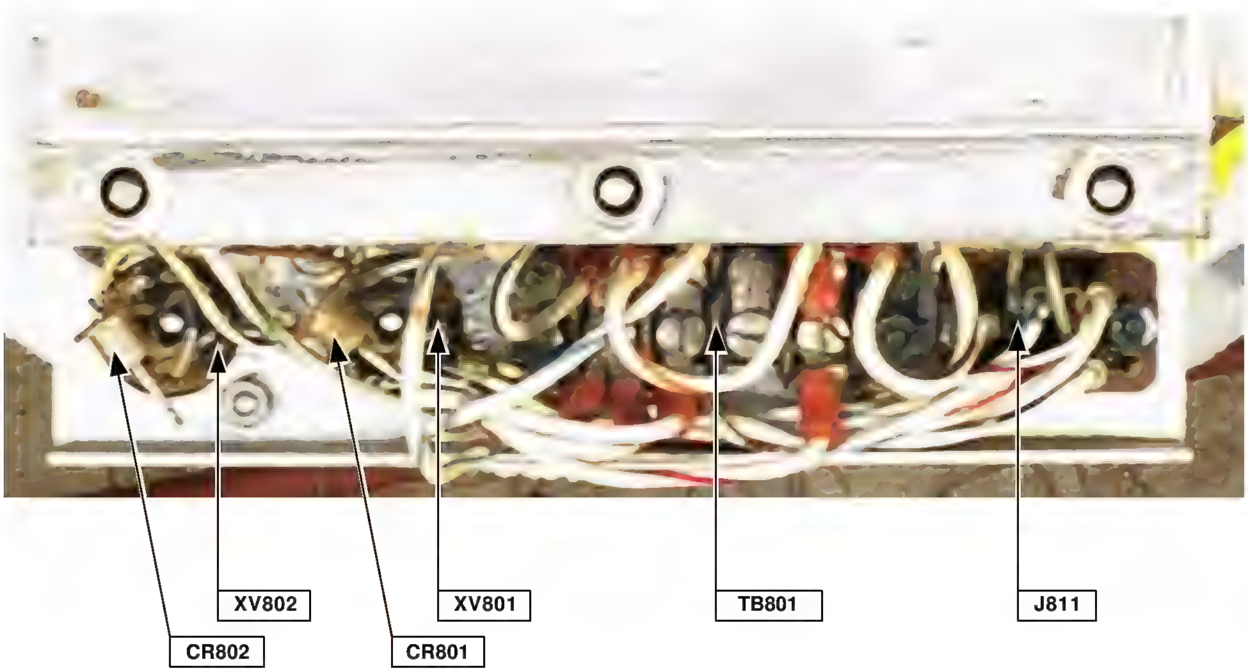

Shown with V801 and V802 replaced with CR801 and CR802 (under sockets) by Field Change 6.

Figure 6-30 Power-Supply Subchassis, Bottom View[19]

[19] Photo courtesy of Dan Arney, Annotatiuon courtesy of Pete Wokoun, KH6GRT

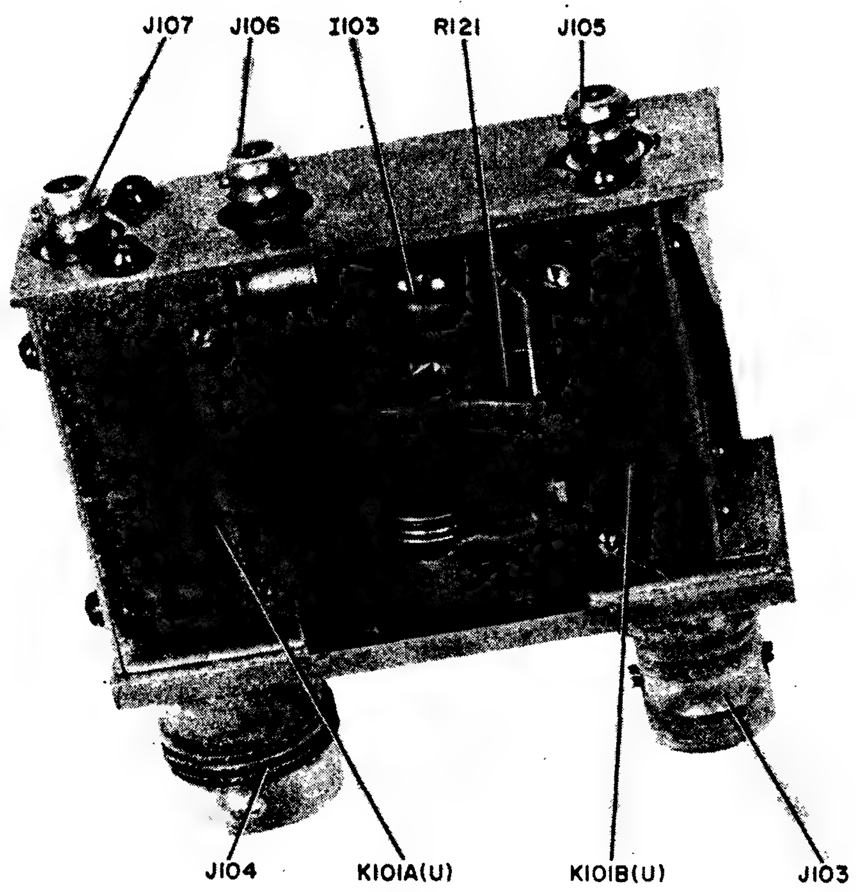

Figure 6-31. Antenna Relay Assembly, Internal View

Figure 6-31 Antenna Relay Assembly, Internal View

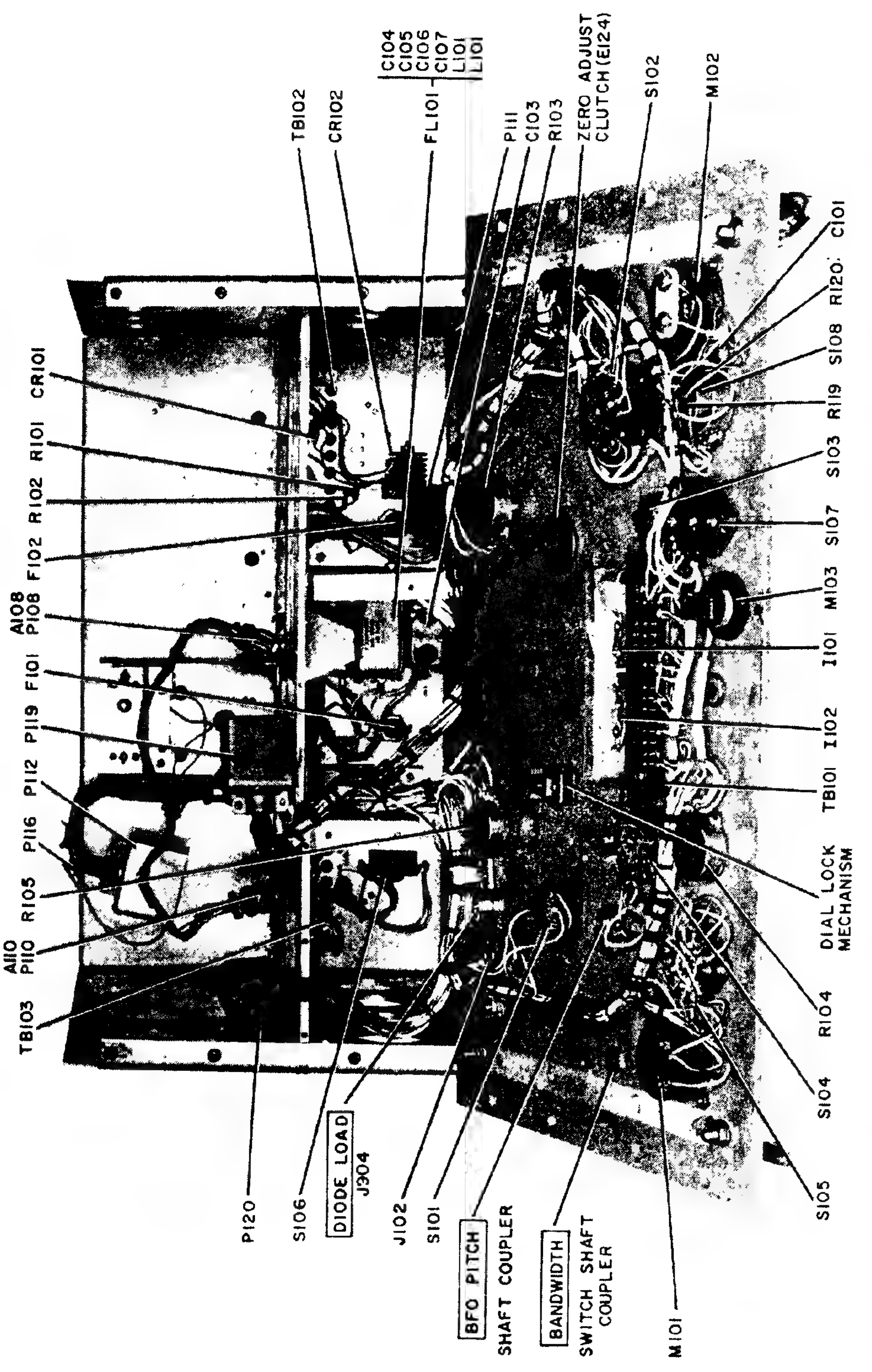

Figure 6-32. Radio Receiver R-390A/URR, Front Panel and Interior of Main Frame

Figure 6-32 Radio Receiver R-390A/URR, Front Panel and Interior of Main Frame

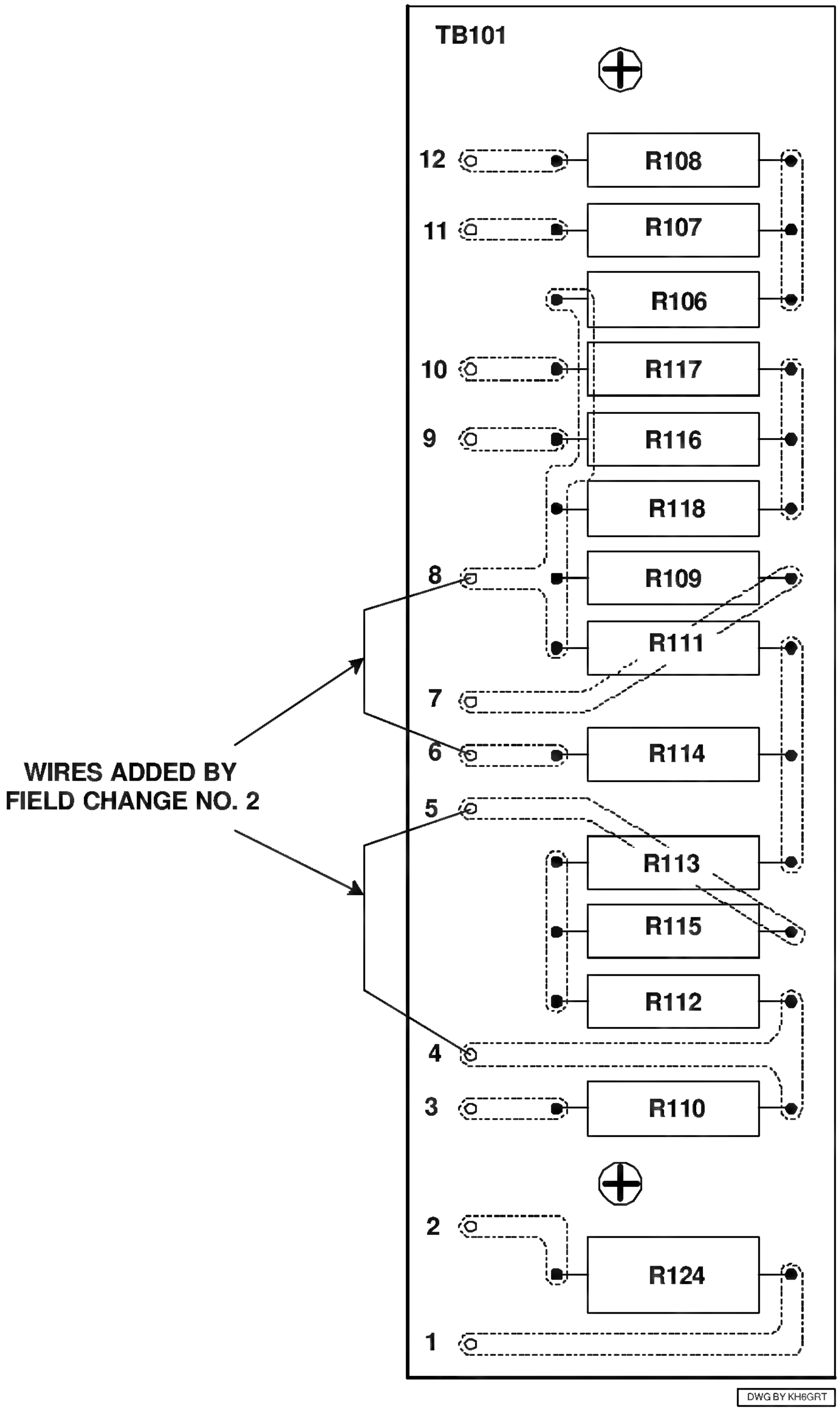

Figure 6-33 R390A TB101 with Field Change 2[20]

[20] Courtesy of Pete Wokoun, KH6GRT

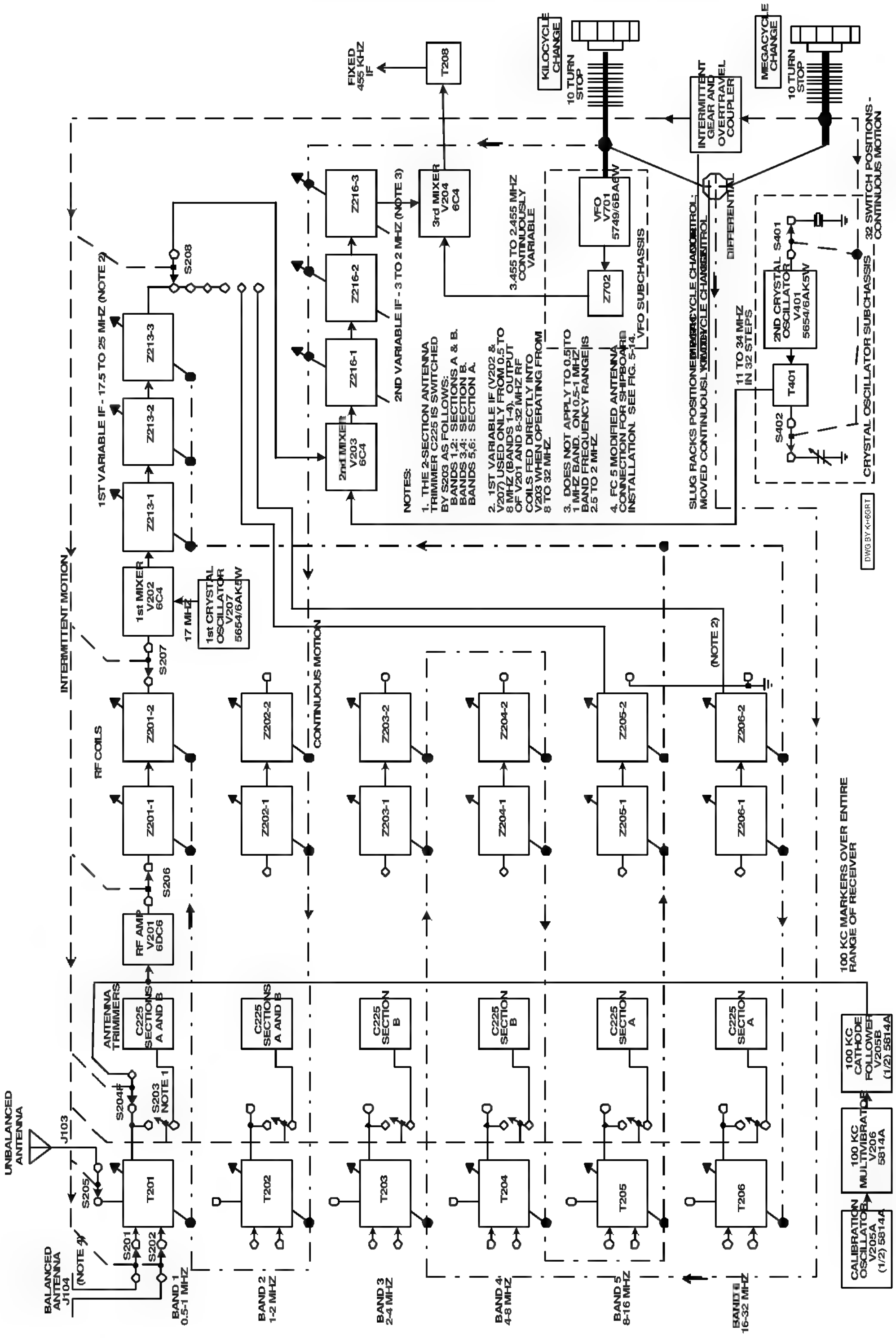

Figure 6-34 Tuning System Showing Relationship of Stages, Block Diagram[21]

[21] Courtesy of Pete Wokoun, KH6GRT

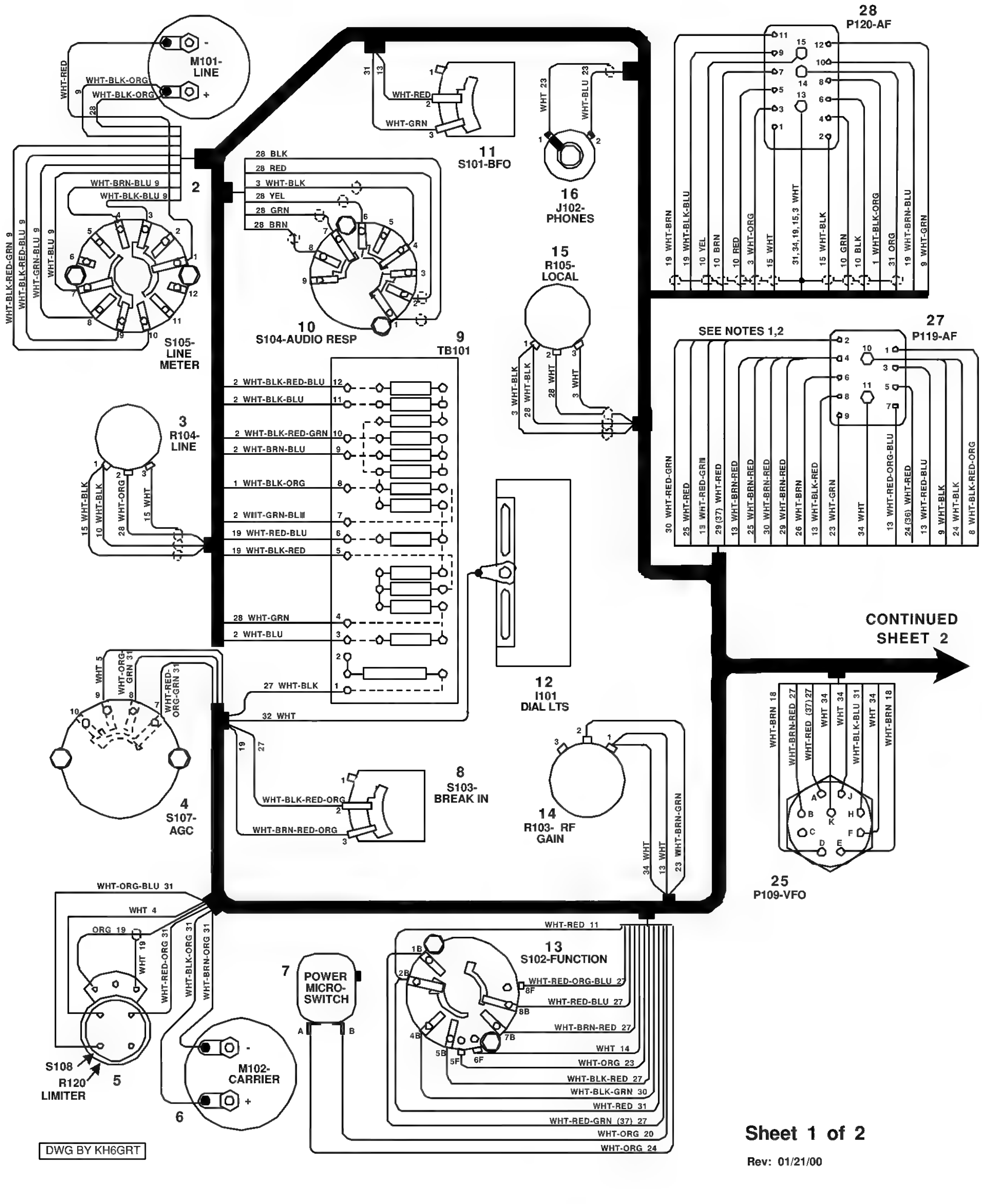

Figure 6-35 Radio Receiver R-390A/URR, Main Frame Wiring Diagram (Sheet 1 of 2)[22]

[22] Courtesy of Pete Wokoun, KH6GRT

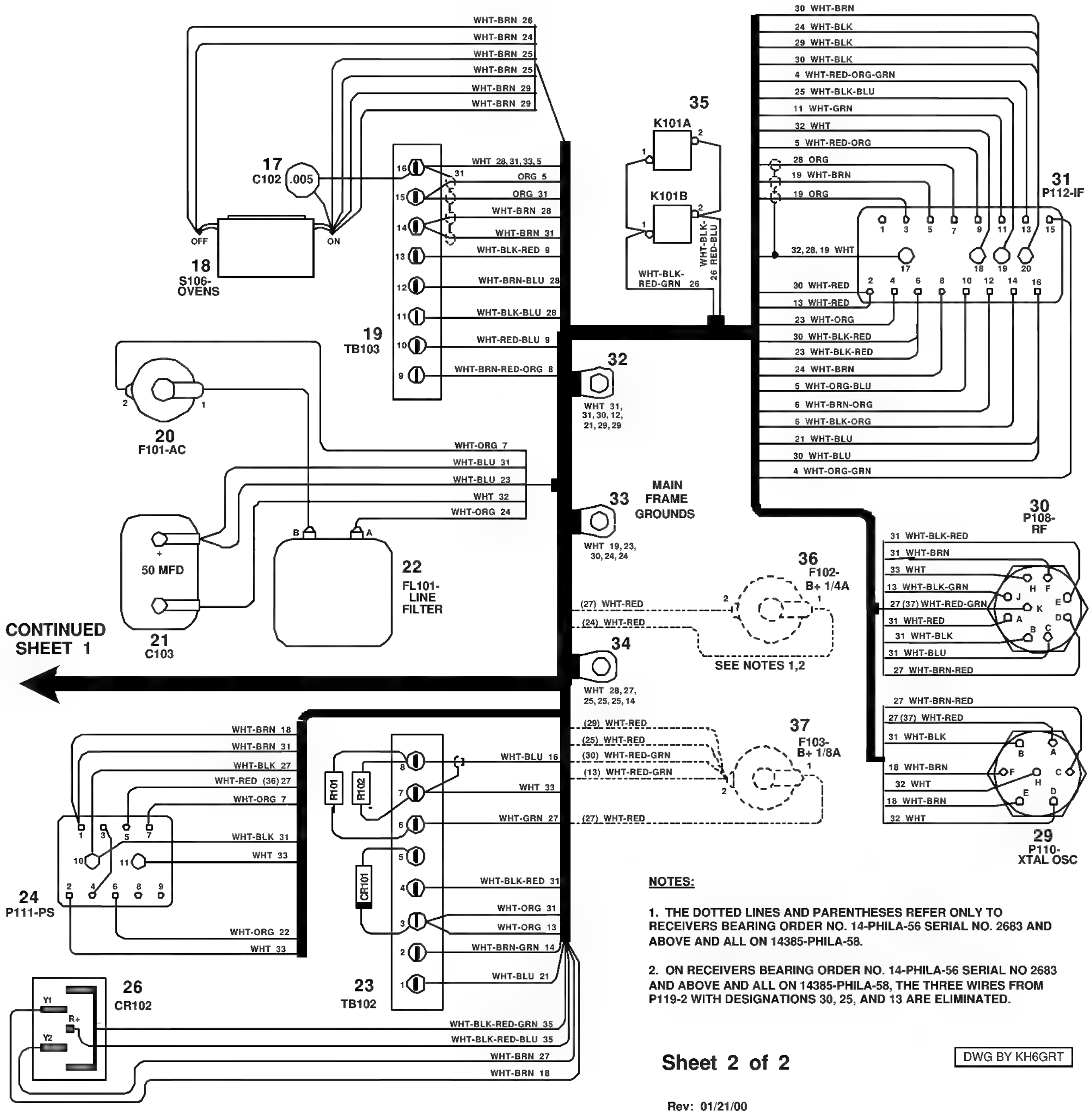

Figure 6-35 Radio Receiver R-390A/URR, Main Frame Wiring Diagram (Sheet 2 of 2)[23]

[23] Courtesy of Pete Wokoun, KH6GRT

Zoning for RF Gear Train Assembly, Exploded View Figure 6-36			
INDEX NO.	LOCATION	PART NAME	REFERENCE SYMBOL
1	1A,1B	Riveted locking plate	A216
2	1A,1B	Spur gear	0323
3	1B	Rack gear springs (2 used)	0322
4	1B	7/16-inch retaining ring	H213
5	2B	4-40 square nut	H219
6	1B,2B	Gear clamp	0207
7	2B	3-56 by 1/4-inch sockethead screw	H217
8	2B	Gear clamp	H231
9	2B	Bevel gear	0202
10	2B	Bevel gear	0213
11	2B	4-40 by 9/16-inch sockethead screw	H218
12	2A	No. 8 split lockwashers (6 used)	H201
13	2A	8-32 by 3/8-inch binderhead screws (6 used)	H230
14	2B	Gear bushing	0221
15	2B	Gear clamp	H231
16	2B	Washers	H251
17	2B	Mechanical counter	M201
18	1B,2B	No. 4 split lockwashers (4 used)	H202
19	1B,2B	4-40 by 5/16-inch machine screws (4 used)	H227
20	2B	4-40 by 9/16-inch sockethead screw	H218
21	1B	Locked clutch gear assembly	0295
22	1B	3/56 by 1/4-inch sockethead screw	H217
23	1B	Gear clamp	H231
24	1C	Bevel gear	0212
25	2C	Pressed bevel gear	0296
26	2B	6-32 by 3/16-inch machine screws (2 used)	H228
27	2B	Staked gear post	0252
28	2C	Special screw	H240
29	2C	No.5 split lockwasher	H212
30	2C	8-32 by 3/8-inch binderhead screws (6 used)	H230
31	2C	No. 8 split lockwashers (6 used)	H201

Zoning for RF Gear Train Assembly, Exploded View Figure 6-36			
INDEX NO.	LOCATION	PART NAME	REFERENCE SYMBOL
32	2B,2C	Front gear plate	A201
33	2C	1-40 square nut	H219
34	2C	0.312-inch hole gear clamp	H233
35	2C	4-40 by 1/2-inch sockethead screw	H215
36	2C,3C	Idler gear	0204
37	3C	Gear bushing	0242
38	3C	Shaft sleeve	0215
39	3C,3D	Final differential gear assembly	0219
40	2C	Gear panel spacing posts (3 used)	H236
41	2D	1/4-inch retaining ring	H224
42	2C,2D 3C,3D	No. 8 riveted gear	0205
43	2D	4-40 square nut	H219
44	2D	Soldered rack gear	0201
45	2D	4-40 by 9/16-inch sockethead screw	H218
46	2D	Gear clamp	0208
47	2D	Retaining ring	H234
48	2D,3D	Soldered gear	0392
49	2D,3D	Spur gear	0254
50	2D,3D	Gear rack springs (2 used)	0325
51	3D	4-40 by 9/16-inch sockethead screw	H218
52	3D	Gear clamp	0209
53	3D	Soldered rack gear	0363
54	3D	4-40 square nut	H219
55	3D	4-40 by 1/4-inch machine screws (3 used)	H241
56	3D	0.5 to 1.0 MHz RF cam, front	0311-1
57	3D	No. 6/0 taper pin	0311-2
58	3D	Retaining ring	H234
59	3D	No. 2 gear assembly consisting of Retaining ring Spur gear Springs (2 used)	 H234 0259 0270

Zoning for RF Gear Train Assembly, Exploded View Figure 6-36			
INDEX NO.	**LOCATION**	**PART NAME**	**REFERENCE SYMBOL**
		Soldered gear	0271
60	3D	2.0 to 4. 0 MHz RF cam, front	0313-1
61	3D	No. 6/0 taper pin	0313-2
62	4D	8.0 to 16.0 MHz RF cam and gear, front	0315-1
63	3D	8.0 to 16.0 MHz spur gear	0328
64	3D	8.0 to 16. 0 MHz loading gear	0324
CS	3D	8.0 to 16. 0 MHz gear rack springs (2 used)	0273
66	3C	Pinned spur gear	0390
67	3C	6-32 by 1/4-inch binderhead screws (2 used)	H216
68	3C	No. 6 split lockwashers (2 used)	H203
69	3C	No. 6 flat washers (2 used)	H291
70	3C	Detent spring	0244
71	4C	0.312-inch hole gear clamp	H233
72	4C	4-40 by 1/2-inch sockethead screw	H215
73	3C,3D	Differential shaft	0206
74	4D	Pinned gear assembly	0261
75	4D	No. 6/0 taper pin	0315-2
76	4D	Washers (2 used)	H254
77	4D	Gear bushing	0222
78	4C	Gear bushing	0223
79	4C	Spur gear	0243
80	4C	4-40 square nut	H219
81	3C	7/16-inch retaining ring	H213
82	3C	4-40 by 9/16-inch sockethead screw	H218
83	3C	Gear clamp	0211
84	3B	4-40 square nut	H219
85	3C	1/4-inch E-type retaining ring	H222
86	3B,3C	Pressed gear	0253
87	3B	Switch gear assembly	0307
88	3B	Retaining ring	H237
89	3B,3C	Multiturn gear springs (2 used)	0319
90	3B,3C	Megahertz gear	0218

Zoning for RF Gear Train Assembly, Exploded View Figure 6-36			
INDEX NO.	**LOCATION**	**PART NAME**	**REFERENCE SYMBOL**
91	3B,3C	Soldered megahertz gear	0321
92	4C	Wash	H251
93	4C	Spur gear	0245
94	4B	Pinned stop assembly	0316
95	4B	Pinned gear assembly	0246
96	4B,5B	Washers (2 used)	H254
97	4B	Panel spacing posts (3 used)	H235
98	4C	4-40 square nut	H219
99	4C	0.312-inch hole gear clamp	H233
100	4C	4-40 by 1/2-inch sockethead screw	H215
101	4C	RF stop assembly	0317
102	4C	1/8-inch E-type retaining ring	H221
103	4C	Locking gear	0203
104	4C,4D	Washer	H251
105	4C,4D	Washer	H253
106	4C,4D	Retaining ring	H234
107	4D	8-32 by 5/16-inch flathead machine screw	H226
108	4D	8-32 by 5/16-inch flathead machine screws (3 used)	H226
109	5C	Riveted front gear plate	A202
110	SC	Pinned gear	0283
111	5C	No. 8 split lockwashers (3 used)	H201
112	5C	8-32 by 3/8-inch machine screws (3 used)	H230
113	5C	5/16-inch flat washer	H214
114	SB	4-40 square nut	H219
115	5B,5C	Gear clamp	0210
116	5C	4-40 by 9/16-inch sockethead screw	H218
117	5C,6C	Oscillator spur gear	0241
118	6D	Cam plate brackets (2 used)	A206
119	6D	6-32 by 7/16-inch machine screws (2 used)	H255
120	5X,6D	No. 6 split lockwashers (2 used)	H203
121	5D	1/4-inch retaining ring	H224
122	5C,5D	Shim washer	H251

Zoning for RF Gear Train Assembly, Exploded View Figure 6-36			
INDEX NO.	LOCATION	PART NAME	REFERENCE SYMBOL
123	5C,5D	Shim washer	H253
124	5D	Oscillator dial hub	0240
125	5D	1/4-inch retaining ring	H224
126	5D	6-32 by 3/8-inch flathead machine screws (6 used)	H225
127	SD	6-32 by 3/8-inch flathead machine screw	H225
128	4D	No. 6 split lockwashers (4 used)	H203
129	3D,3E 4D,4E	Loaded rack gear assembly consisting of Retaining ring Springs (2 used) Spur gear Soldered gear	 H234 0247 0254 0262
130	4D	6-32 by 3/8-inch Phillips-head screws (4 used)	H229
131	4E	4-40 square nut	H219
132	4E	0.312-inch hole gear clamp	H233
133	4E	4-40 by 1/2-inch sockethead screw	H215
134	4E	No. 4 gear assembly consisting of Spur gear Springs (2 used) Spur gear Soldered gear	 0253 0273 0274 0324
135	4E	4-40 square nut	H219
136	4E	0.312-inch hole gear clamp	H233
137	4E	4-40 by 1/2-inch sockethead screw	H215
138	4F	4-40 square nut	H219
139	4F	0.312-inch hole gear clamp	H233
140	4F	4-40 by 1/2-inch sockethead screw	H215
141	4E,4F	Loaded rack gear assembly consisting of Retaining ring Springs (2 used) Spur gear Soldered gear	 H234 0247 0254 0262
142	4F	16.0 to 32.0 MHz RF cam, front	0310-1
143	4F	No. 6/0 taper pin	0310-2
144	4E	4.0 to 8.0 MHz RF cam, front	0314-1

Zoning for RF Gear Train Assembly, Exploded View Figure 6-36			
INDEX NO.	LOCATION	PART NAME	REFERENCE SYMBOL
145	4E	No. 6/0 taper pin V	0314-2
146	4E	1.0 to 2.0 MHz RF cam, front	0312-1
147	4E	No. 6/0 taper pin	0312-2
148	4D,5D	Rack panel spacing posts (4 used)	11244
149	5D	Pressed cam plate	A209
150	5E	No. 6 split lockwashers (4 used)	H203
151	5E	6-32 by 3/8-inch machine screws (4 used)	H229
152	5E	Rack panel short posts (3 used)	H242
153	6D,6E	1.0 to 2.0 MHz RF cam, inner	0312-3
154	6D,6E	No. 6/0 taper pin	0312-4
155	6D	4.0 to 8.0 MHz RF cam, rear	0314-3
156	5E,6E	Rack panel long post	H243
157	6E	0.5 to 1.0 MHz RF cam, rear	0311-3
158	6E	No. 6/0 taper pin	0311-4
159	6E	No. 6/0 taper pin	0313-3
160	6E	8.0 to 16.0 MHz RF cam, inner	0315-3
161	6D	No. 6/0 taper pin	0315-4
162	6E	2.0 to 4. 0 MHz RF cam, rear	0313-4
163	6D,6E	2.0 to 4.0 MHz RF camshaft	0313-5
164	6D,6E	0.5 to 1.0 MHz RF camshaft	0311-5
165	6D	16.0 to 32.0 MHz RF cam, rear	0310-3
166	6D	No. 6/0 taper pin	0310-4
167	6D	No. 6/0 taper pin	0314-4
168	6D	16.0 to 32.0 MHz RF camshaft	0310-5
169	5D,6D	4.0 to 8.0 MHz RF camshaft	0314-5
170	6D,	Trimmer shaft	0236
171	7D	VFO shaft insulator	E227
172	7D	Helical driven gear	0318
173	7D	Helical gear clamp	H245
174	7D	Helical gear bushing	0256
175	7D	Special washer	H232
176	7D	3/16-inch retaining ring	H223

Zoning for RF Gear Train Assembly, Exploded View Figure 6-36			
INDEX NO.	**LOCATION**	**PART NAME**	**REFERENCE SYMBOL**
177	7D	8-32 by 1/8-inch setscrew	H220
178	7D	8-32 by 1/8-inch setscrew	H220
179	6E,7E	Pressed auxiliary cam plate	0306

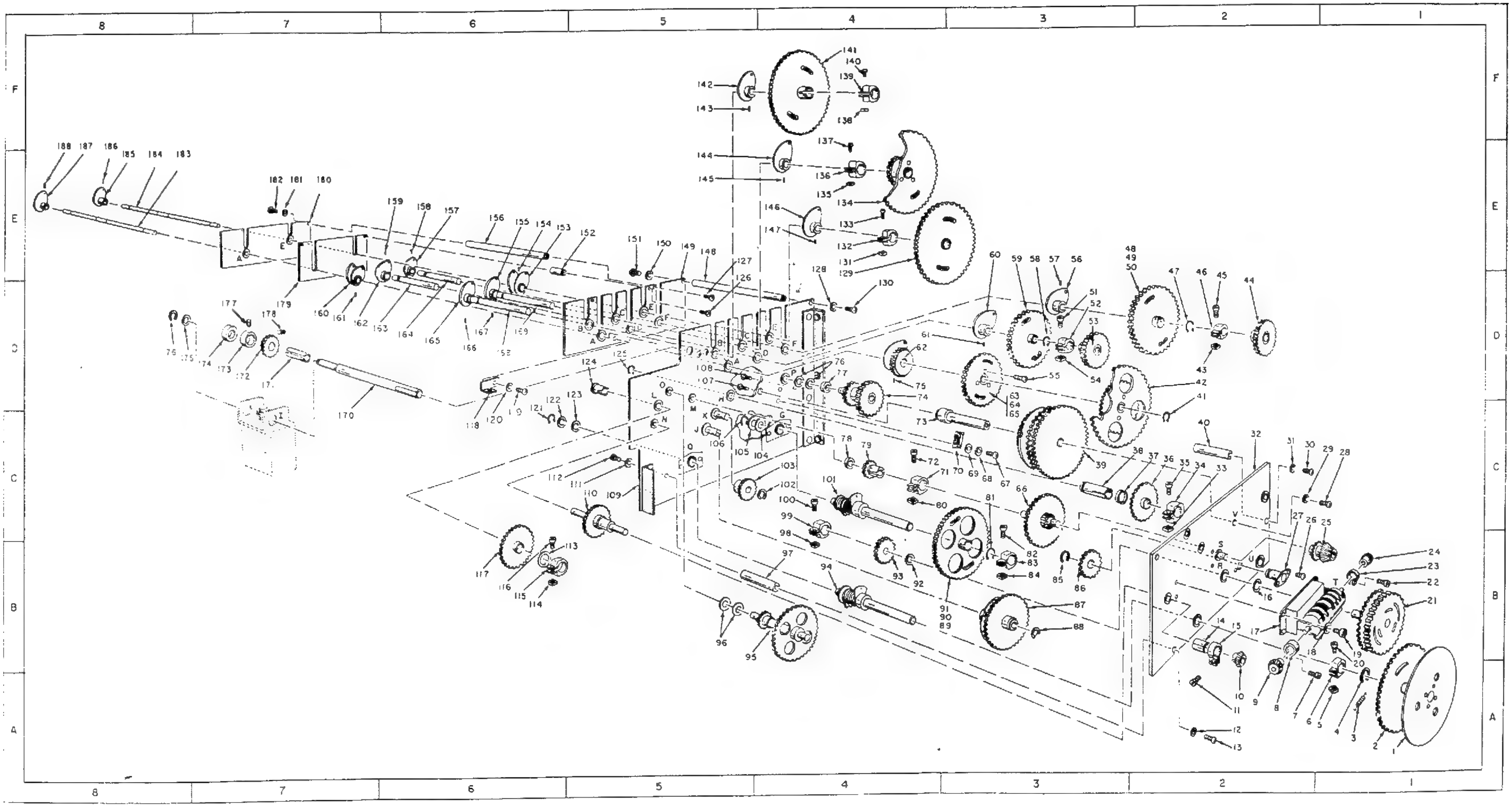

Figure 6-36. RF Gear Train Assembly, Exploded View

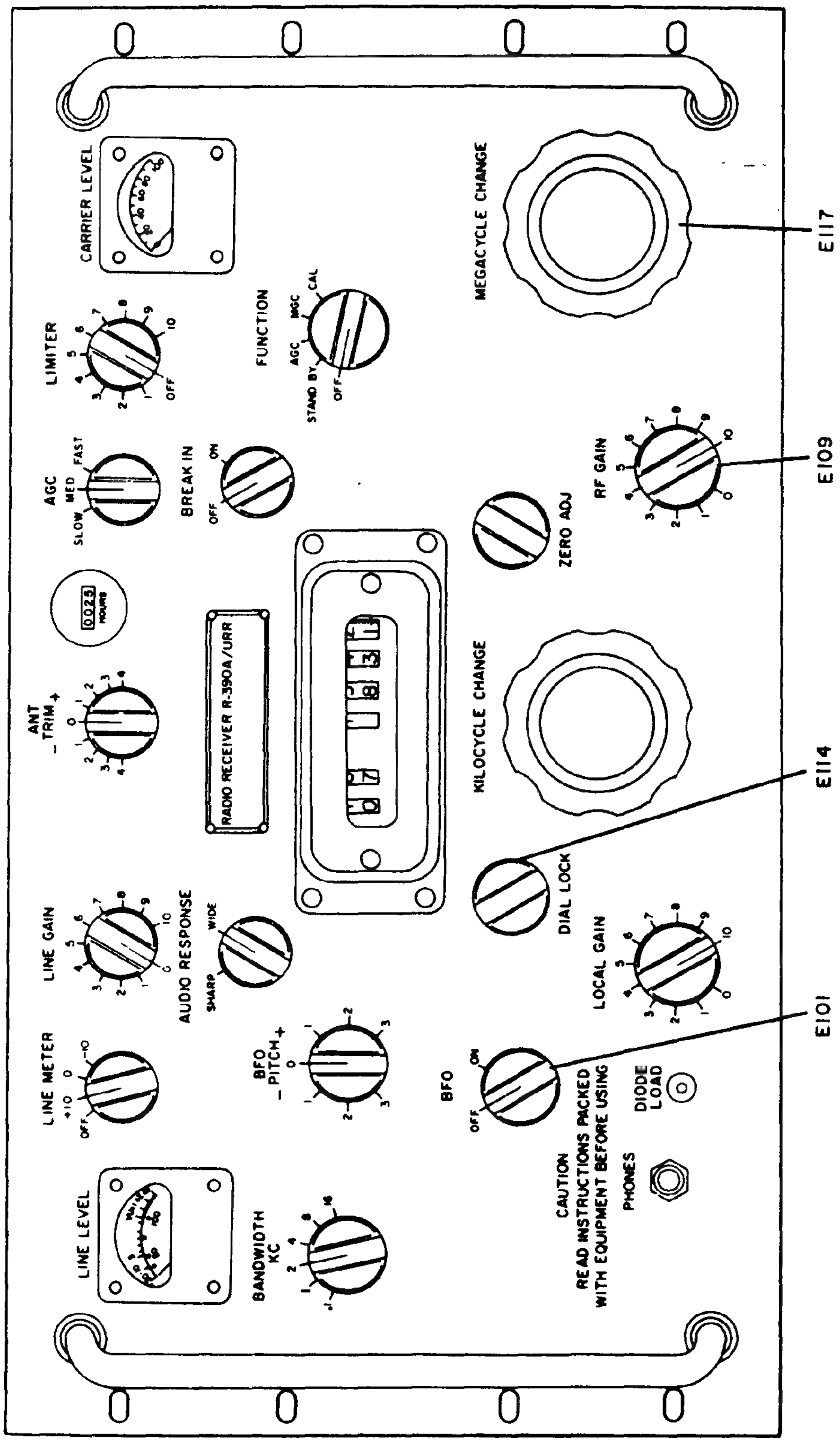

Figure 6-37. Front Panel

Figure 6-37 Front Panel

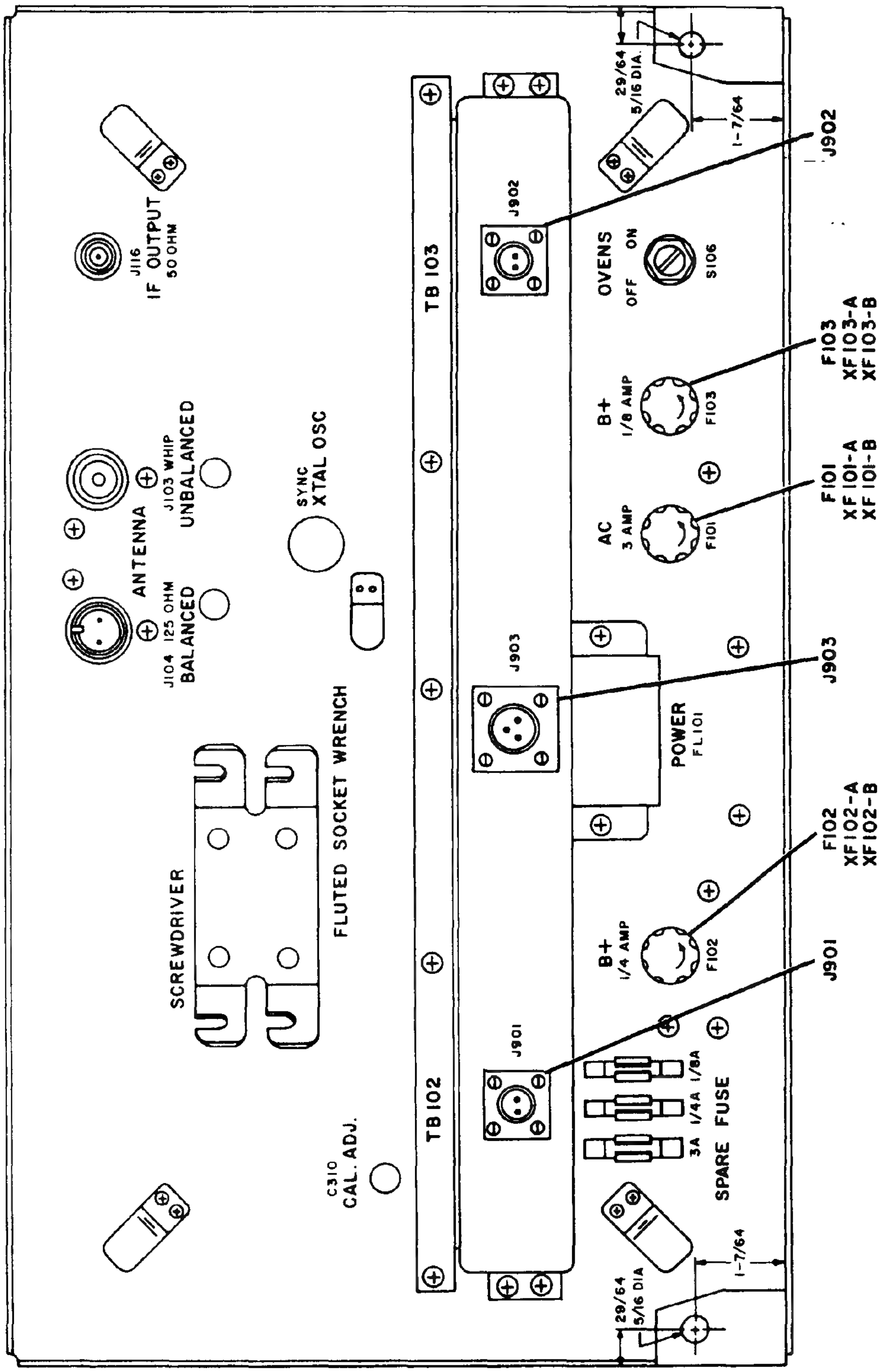

Figure 6-38. Rear Panel

Figure 6-38 - Rear Panel

7. - Chapter 7 - Parts List

TABLE OF CONTENTS

7. - CHAPTER 7 - PARTS LIST 7-1

7.1 INTRODUCTION 7-2
7.2 LIST OF MAJOR UNITS 7-3
7.3 PARTS LIST 7-4
7.4 LIST OF MANUFACTURERS 7-67

TABLES

Table 7-1 - LIST OF MAJOR UNITS 7-3
Table 7-2: PARTS LIST 7-4
Table 7-3: LIST OF MANUFACTURERS 7-67

Sub-Chassis Index of Table 7-2

Parts List: Part 1 - Panel and Frame Group 7-4
Parts List: Part 2 - RF Amplifier Sub-Chassis 7-11
Parts List: Part 3 - Crystal Oscillator Sub-Chassis 7-38
Parts List: Part 4 - IF Amplifier Sub-Chassis 7-42
Parts List: Part 5 - AF Amplifier Sub-Chassis 7-55
Parts List: Part 6 - VFO Sub-Chassis 7-62
Parts List: Part 7 - Power Supply Sub-Chassis 7-65
Parts List: Part 8 - Change Additions 7-66

7.1 INTRODUCTION

7.1.1 This chapter provides reference data on the parts comprising Radio Receiver R-390A/URR, The data is in tabular form and is intended to supplement the troubleshooting, maintenance, and repair information in other chapters.

7.1.2 Reference designations have been assigned to identify all maintenance parts of the equipment. They are used for marking the equipment (adjacent to the part they identify) and are included on drawings, diagrams, and the parts list. The letters of a reference designation indicate the kind of part (generic group), such as resistor, capacitor, electron tube, etc. The number differentiates between parts of the same generic group. Sockets associated with a particular plug-in device, such as an electron tube or a fuse, are identified by a reference designation which includes the reference designation of the plug-in device. For example, the socket for fuse F101 is designated XF101.

7.1.3 Table 7-1 lists the major units of Radio Receiver R-390A/URR, that is, the main frame and six removable subassemblies. Each unit has been assigned a group of numbers to be used in the reference designation for the detail parts of that unit.

7.1.4 Table 7-2 lists the parts required to maintain the receiver. The maintenance parts are listed numerically by groups and alphanumerically within groups. The following information is provided by table 7-2: (1) reference designation of the part; (2) reference to explanatory notes (see paragraph 7.1.7); (3) description of the part with part number and manufacturer's code; and (4) identification of the illustration which pictorially locates the part. In addition, the attaching hardware for each part is listed following the listing of the associated part.

7.1.5 Table 7-3 lists the manufacturers of parts used in the equipment. The table includes the manufacturer's code used in table 7-2. The code is contained in Federal Supply Code for Manufacturers, H4-1.

7.1.6 The Allowance Parts List (APL) issued by the Electronics Supply Office (ESO) includes Federal Stock Numbers and Source Maintenance Recoverability Codes. Therefore, reference should be made to the APL prepared for the equipment for stock numbering information.

7.1.7 The following notes are referenced in the NOTES column of table 7-2.

Note 1: See equipment modification chart (paragraph 1.5.2).

Note 2: Tuning cores E213 through E226-3 do not come with their respective transformers and coils. These items must be ordered separately.

Note 3: Elapsed time indicator applies to certain ships only, and is supplied with field change (FC) No. 8 (table 1-8).

Note 4: Resistors R502 and R503 are selected for optimum bandpass. R502 is selected within the range of 33 to 63k, R503 in the range of 560 to 2700 ohms.

Note 5: "AN" type connectors supplied with FC No. 3 for shipboard only.

Note 6: Diode Test Jack supplied with FC No. 4 for shipboard only.

Note 7: Rectifier tubes V801 and V802 replaced with diodes by FC No. 6 for shipboard only.

Note 8: FC No. 7 changes R210 and R702 to 220k for shipboard installations in Supplementary Radio Spaces only.

Note 9: For 230 Vac supply, F101 value is changed to 1-1/2 amp.

7.2 LIST OF MAJOR UNITS

Table 7-1 - LIST OF MAJOR UNITS

QTY	NAME OF UNIT	REF DESIG GROUP
1	Panel and Frame Group	100-199
1	RF Amplifier Subchassis	200-399
1	Crystal Oscillator Subchassis	400-499
1	IF Amplifier Subchassis	500-599
1	AF Amplifier Subchassis	600-699
1	VFO Subchassis	700-799
1	Power Supply Subchassis	800-899
1	Shipboard Power Box	900-999

7.3 PARTS LIST

Table 7-2: PARTS LIST

Parts List: Part 1 - Panel and Frame Group			
REF DESIG	**NOTES**	**NAME AND DESCRIPTION**	**FIG. NO.**
A108		SHIELD, ELECTRICAL CONNECTOR, American Phenolic Corp. part no. 26-834, per (80063) SM B-283197	6-32
A109		Same as A108.	6-15
A110		Same as A108.	6-32
C101		CAPACITOR, FIXED, PAPER DIELECTRIC: 220,000 pF, ±20%, 100 Vdcw, (56289) part no. 96P22401S13.	6-32
C102		CAPACITOR, FIXED, CERAMIC DIELECTRIC: 5000 pF, ±15%, 1000 Vdcw, (13499) drawing no. 913-2349-00.	6-15
C103		CAPACITOR, FIXED, ELECTROLYTIC: 50 *μF,* 50 Vdcw, MIL type CE64C500G. (Attaching Parts) SCREW, MACHINE: Pan head, recessed drive, steel, 6-32 thread x 3/8 in. Ig -2 required. NUT, HEX: Steel, 6-32 thread - 2 required. WASHER, LOCK: No. 6 - 2 required.	6-15
C104		Part of FL101, listed for reference only.	6-32
C105		Part of FL101, listed for reference only.	6-32
C106		Part of FL101, listed for reference only.	6-32
C107		Part of FL101, listed for reference only.	6-32
CR101		SEMI-CONDUCTOR DEVICE, DIODE: Germanium crystal, MIL type 1N198.	6-32
CR102		RECTIFIER, METALLIC: 33V rms, 26.0 Vac, 2.60 mA, full wave rectification, (13499) drawing no. 353 0167 00. (Attaching Parts) SCREW, MACHINE: Pan head, recessed drive, steel, 6-32 thread x 3/8 in. lg - 2 required. NUT, HEX: Steel, 6-32 thread - 2 required. WASHER, LOCK: No. 6 - 2 required. WASHER, FLAT: No. 6 - 2 required.	6-32

Parts List: Part 1 - Panel and Frame Group			
REF DESIG	NOTES	NAME AND DESCRIPTION	FIG. NO.
E101		KNOB: (80063) drawing no. SM B-249242-1	6-37
E102		Same as E101.	6-37
E103		Same as E101.	6-37
E104		Same as E101.	6-37
E105		Same as E101.	6-37
E106		Same as E101.	6-37
E107		Same as E101.	6-37
E108		Same as E101.	6-37
E109		KNOB: (80063) drawing no. SM-B-249242-2	6-37
E110		Same as E109.	6-37
E111		Same as E109.	6-37
E112		Same as E109.	6-37
E113		Same as E109.	6-37
E114		KNOB: (80063) drawing no. SM-B-249242-3	6-37
E115		Same as E114.	6-37
E116		Same as E114.	6-37
E117		KNOB, TUNING: (80063) drawing no. SMB-249243.	6-37
E122		DIAL LOCK, MECHANISM: (89462) part no. 5103-25.	6-32
E124		SHAFT ASSEMBLY: Zero adjustment screw.	6-32
F101	9	FUSE, CARTRIDGE: 3 AG slow blowing, 3 A, 250 Vdcw, MIL type F02D3R00B.	6-15
F102	1	FUSE, CARTRIDGE: 3 AG slow blowing, 1/8 A, 250 Vdcw, MIL type F02GR125A.	6-15
F103	1	FUSE, CARTRIDGE: 3 AG slow blowing, 1/8 A, 250 Vdcw, MIL type FO2A250V1/8AS.	6-15

Parts List: Part 1 - Panel and Frame Group			
REF DESIG	NOTES	NAME AND DESCRIPTION	FIG. NO.
FL101		FILTER, RADIO INTERFERENCE: Including C104, C105, C106, C 107, L101, and L102, 110V/220 Vac, 4.0A/2.0A (56289) part no. Y15228, type 5960. (Attaching Parts) SCREW, MACHINE: Pan head, recessed drive, steel, 6-32 thread x 3/8 in. l -2 required. NUT, HEX: Steel, 6-32 thread - 2 required. WASHER, LOCK: No. 6 - 2 required.	6-32
H101		WRENCH, SOCKET HEAD: Bristo splined type, 6 flutes, 7-3/4 in. (13499) drawing no. 540-7922-002.	2-2
H102		SCREWDRIVER: Phillips type, (81348) GGGS121 type 2.	2-2
H103 through H146		Not used.	
H147		RING, RETAINING: 3/16 in., (80063) SM-B-207780	
I101		LAMP, INCANDESCENT: Midget, flange, 6 volts, 0.20 A, GE type No. 328. Fed Spec: W-L-111.	6-32
I102		Same as I101.	6-32
I103		LAMP, GLOW: Candelabra base, 110 V, 1/4 W, (08806) type no. NE-45.	6-31
J101		Not used.	
J102		JACK, TELEPHONE: MIL type JJ034.	6-32
J103		CONNECTOR: UG-568/U; per (80063) drawing no. SM-C-283206	6-31
J104		CONNECTOR: UG-422/U; per (80063) drawing no. SM-C-283206	6-31
J105		CONNECTOR: 3MB; per (80063) drawing no. SM-C-283206	6-31
J106		CONNECTOR: 3MB; per (80063) drawing no. SM-C-283206	6-31
J107		CONNECTOR: 3MB; per (80063) drawing no. SM-C-283206	6-31
J108 through J115		Not used.	

Parts List: Part 1 - Panel and Frame Group			
REF DESIG	NOTES	NAME AND DESCRIPTION	FIG. NO.
J116		CONNECTOR: (80211) drawing no. 309A4010.	6-14
K101		RELAY, ANTENNA CHANGEOVER: (82424) type no. DKCR76. (Attaching Parts) SCREW, MACHINE: Pan head, recessed drive, steel, 6-32 thread x 5/16 in. l -4 required.	6-31
L101		COIL, FILTER, AC LINE: Part of FL101, listed for reference only.	6-32
L102		Same as L101.	6-32
M101		METER, LINE LEVEL: Flange, panel mountings, (80063) drawing no. SM-C- 283217 (Attaching Parts) SCREW, MACHINE: Pan head, recessed head, steel, 4-40 thread x 3/4 in. l -4 required. NUT, HEX: Steel, 4-40 thread - 4 required. WASHER, LOCK: no. 4 - 4 required. WASHER, Flat: Steel, no. 4 - 4 required.	6-32
M102		METER, CARRIER LEVEL: (55026) type no. 182; per (80063) drawing no. SM-C-283216. (Attaching Parts) SCREW, MACHINE: Pan head, recessed head, steel, 4-40 thread x 3/4 in. l -4 required. NUT, HEX: Steel, 4-40 thread - 4 required. WASHER, LOCK: No. 4 - 4 required. WASHER, FLAT: Steel, no. 4 - 4 required.	6-32
M103	3	INDICATOR, ELAPSED TIME:	6-32
P102 through P107		Not used.	
P108		CONNECTOR, RECEPTACLE, ELECTRICAL: 9 female contacts; (02660) part no. 26-013.	6-32
P109		Same as P108.	6-15
P110		CONNECTOR, RECEPTACLE, ELECTRICAL: 7 female contacts; (02660) part no. 26-192.	6-32
P111		INSERT, CONNECTOR, ELECTRICAL: 11 female contacts; (02660) part no. 26-805.	6-15

Parts List: Part 1 - Panel and Frame Group			
REF DESIG	NOTES	NAME AND DESCRIPTION	FIG. NO.
P112		PLUG, CONNECTOR, ELECTRICAL: 20 female contacts; (02660) part no. 26-810.	6-32
P113		Not used.	
P114		CONNECTOR, PLUG, ELECTRICAL: 1 female contact; (30684) part no. 45425.	6-14
P115		CONNECTOR:	
P116		CONNECTOR, PLUG, ELECTRICAL: 1 female contact; 90^0 angle; (30684) part no. 45400.	6-14
P117 and P118		Not used.	
P119		Same as P111.	6-32
P120		INSERT, CONNECTOR, ELECTRICAL: 15 female contacts; (02660) part no. 26-150.	6-15
R101		RESISTOR, FIXED, COMPOSITION: 6800 ohm, ± 10%, 1/2 W, MIL type RC20GF682K.	6-15
R102		RESISTOR, FIXED, COMPOSITION: 820 ohm, ± 10%, 1/2 W, MIL type RC20GF821K.	6-15
R103		RESISTOR, VARIABLE: 5000 ohm, ± 20%, 2 W, (71450) type SW1376.	6-32
R104		RESISTOR, VARIABLE: 2500 ohm, ± 20%, 2 W, JAN type RV4ATSA252D.	6-32
R105		Same as R104.	
R106		RESISTOR, FIXED, FILM: 778 ohm, ± 1%, 1/2 W.	6-33
R107		RESISTOR, FIXED, FILM: 3190 ohm, ± 1%, 1/2 W	6-33
R108		Same as R107.	6-33
R109		RESISTOR, FIXED, FILM: 3920 ohm, ± 1%, 1/2 W, MIL type RN20X3921F.	6-33
R110		RESISTOR, FIXED, FILM: 3570 ohm, ± 1%, 1/2 W, MIL type RN20X3571F.	6-33
R111		RESISTOR, FIXED, FILM: 200 ohm, ± 1 %, 1/2 W, MIL type RN20X2000F.	6-33
R112		Same as R111.	
R113		RESISTOR, FIXED, FILM: 250 ohm, ± 1%, 1/2 W.	6-33

Parts List: Part 1 - Panel and Frame Group			
REF DESIG	NOTES	NAME AND DESCRIPTION	FIG. NO.
R114		Same as R111.	6-33
R115		Same as R111.	6-33
R116		RESISTOR, FIXED, FILM: 2030 ohm, ± 1%, 1/2 W.	6-33
R117		Same as R116.	6-33
R118		RESISTOR, FIXED, FILM: 2740 ohm, ± 1%, 1/2 W, MIL type RN20X2741F	6-33
R119		RESISTOR, FIXED, COMPOSITION: 56,000 ohm, ± 10%, 1/2 W, MIL type RC20GF563K.	6-32
R120		RESISTOR, VARIABLE: 500,000 ohm, ± 20%, 2W.	6-32
R121		RESISTOR, FIXED, COMPOSITION: 220, 000 ohm, ± 10%, 1/2 W, MIL type RC20GF224K.	6-31
R122 and R123		Not used.	
R124		RESISTOR, FIXED, COMPOSITION: 2.7 ohm, ± 10%, 1 W.	6-33
S101		SWITCH, ROTARY: SPDT (76854) type no. 23.	6-32
S102		SWITCH, ASSEMBLY: Rotary (13499) drawing no. 259-0703-00.	6-32
S103		Same as S101.	6-32
S104		SWITCH, SECTION, ROTARY: 3 moving contacts, 9 fixed contacts, 3 pole (82104) part no. 8540-4ULR-1.	6-32
S105		SWITCH, ROTARY: 1 section, nonpile-up type, 4 throws (13499) drawing no. 259-0512-00.	6-32
S106		SWITCH, ROTARY: 2 position, SPST non-pile-up, 250 V, 3 A, 125 V, 6A (04009) type no. 81715-WE.	6-32
S107		SWITCH, ROTARY: SPDT, (13499) drawing no. 259-0517-00.	6-32
S108		SWITCH, ROTARY: DPST, 3A-125 Vac. Part of R120.	6-32

Parts List: Part 1 - Panel and Frame Group			
REF DESIG	NOTES	NAME AND DESCRIPTION	FIG. NO.
TB101		TERMINAL, PHENOLIC: 12 turret terminal, component mounting printed circuit board, consisting of a 14-dB H-type attenuator, and LINE LEVEL METER, M101 multiplier resistors. (Attaching Parts) SCREW, MACHINE: Pan head, recessed drive, steel, 6-32 thread x 1/4 in. l -2 required. WASHER, LOCK: No. 6 - 2 required. WASHER, FLAT: Steel, no. 6 - 2 required.	6-32
TB102		TERMINAL BOARD: 8 screw w/solder lug, 4-1/4 in. l x 1-1/8 in. w x 1/2 in. thick, (71785) type 8-141-YD. (Attaching Parts) SCREW, MACHINE: Pan head, recessed drive, steel, 6-32 thread x 5/8 in. l -4 required. NUT, HEX: Steel, 6-32 thread - 4 required. WASHER, LOCK: no. 6 - 4 required.	6-32
TB103		Same as TB102.	6-32
XF101-A		FUSEHOLDER: (75915) part no. A342003-SA-1.	6-38
XF101-B		CAP, ELECTRIAL: (75915) part no. 342003-SA-2.	6-38
XF102-A		Same as XF101-A.	6-38
XF102-B		Same as XF101-B.	6-38
XF103-A		Same as XF101-A.	6-38
XF103-B		Same as XF101-B.	6-38

Parts List: Part 2 - RF Amplifier Sub-Chassis			
REF DESIG	NOTES	NAME AND DESCRIPTION	FIG. NO.
A200-B		GEAR TRAIN ASSEMBLY: (80063) drawing no. SM-D-343600.	6-36
A201		PLATE: Gear, front (index no. 32).	6-36
A202		PLATE: Gear, front (index no. 109).	6-36
A203 through A207		Not used.	
A208		PLATE: Gear, pressed (index no. 180).	6-36
A209		PLATE: Cam, pressed (index no. 149).	6-36
C201		CAPACITOR ASSEMBLY: Variable, ceramic dielectric, consisting of C201-A, and C201-B (13499) part/drawing no. 917-1117-00.	6-19
C201-A		CAPACITOR, VARIABLE: 3-12 pF, part of T201, listed for reference only.	6-19
C201-B		CAPACITOR, VARIABLE: 8-50 pF, part of T201, listed for reference only.	6-19
C202		CAPACITOR, FIXED, CERAMIC DIELECTRIC: 7 pF, ± 0.25 pF, 500 Vdcw, MIL type CC20CH070C. Part of T201.	6-19
C203		CAPACITOR, FIXED, MICA DIELECTRIC: 330 pF, ± 2%, 500 Vdcw, MIL type CM15D331G. Part of T201.	6-19
C204		CAPACITOR, FIXED, MICA DIELECTRIC: 120 pF, ± 2%, 500 Vdcw, MIL type CM15D121G. Part of T201.	6-19
C205		CAPACITOR ASSEMBLY: Variable, ceramic dielectric, consisting of C205-A, and C205-B (13499) part/drawing no. 917-1117-00.	6-19
C205-A		CAPACITOR, VARIABLE: 3-12 pF, part of T202, listed for reference only.	6-19
C205-B		CAPACITOR, VARIABLE: 8-50 pF, part of T202, listed for reference only.	6-19
C206		Same as C202. Part of T202	6-19
C207		Same as C204. Part of T202.	6-19
C208		CAPACITOR, FIXED, MICA DIELECTRIC: 75 pF, ± 2%, 500 Vdcw, MIL type CM15D750G. Part of T202.	6-19
C209		CAPACITOR ASSEMBLY: Variable, ceramic dielectric, consisting of C209-A, and C209-B (13499) part/drawing no. 917-1117-00.	6-19
C209-A		CAPACITOR, VARIABLE: 3-12 pF, part of T203, listed for reference only.	6-19

Parts List: Part 2 - RF Amplifier Sub-Chassis			
REF DESIG	NOTES	NAME AND DESCRIPTION	FIG. NO.
C209-B		CAPACITOR, VARIABLE: 8-50 pF, part of T203, listed for reference only.	6-19
C210		Same as C202. Part of T203.	6-19
C211		CAPACITOR, FIXED, MICA DIELECTRIC: 36 pF, ± 2%, 500 Vdcw (72136) type no. 605. Part of T203.	6-19
C212		CAPACITOR, FIXED, MICA DIELECTRIC: 39 pF, ± 2%, 500 Vdcw MIL type CM15D390J. Part of T203.	6-19
C213		CAPACITOR ASSEMBLY: Variable, ceramic dielectric, consisting of C213-A, and C213-B (13499) drawing no. 917-1116-00.	6-19
C213A		CAPACITOR, VARIABLE: 3-12 pF, part of T204, listed for reference only.	6-19
C213B		CAPACITOR, VARIABLE: 8-50 pF, part of T204, listed for reference only.	6-19
C214		Same as C202. Part of T204.	6-19
C215		CAPACITOR, FIXED, MICA DIELECTRIC: 100 pF, ± 2%, 500 Vdcw, MIL type CM15D1016. Part of T204.	6-19
C216		CAPACITOR, FIXED, MICA DIELECTRIC: 24 pF, ± 5%, 500 Vdcw, MIL type no. CM15D240J. Part of T204.	6-19
C217		CAPACITOR ASSEMBLY: Variable, ceramic dielectric, consisting of C217-A, and C217-B (13499) drawing no. 917-1115-00.	6-19
C217A		CAPACITOR, VARIABLE: 3-12 pF, part of T205, listed for reference only.	6-19
C217B		CAPACITOR, VARIABLE: 8-50 pF, part of T205, listed for reference only.	6-19
C218		Same as C202. Part of T205.	6-19
C219		CAPACITOR, FIXED, MICA DIELECTRIC: 5 pF, ± 0.5 pF, 300 Vdcw, MIL type CM15D050K. Part of T205.	6-19
C220		CAPACITOR, FIXED, MICA DIELECTRIC: 12 pF, ± 5%, 500 Vdcw, MIL type CM15D120J. Part of T205.	6-19
C221		CAPACITOR ASSEMBLY: Variable, ceramic dielectric, consisting of C221-A, and C221-B (13499) drawing no. 917-1118-00.	6-19
C221A		CAPACITOR, VARIABLE: 3-12 pF, part of T206, listed for reference only.	6-19
C221B		CAPACITOR, VARIABLE: 8-50 pF, part of T206, listed for reference only.	6-19
C222		Same as C202. Part of T206,	6-19

Parts List: Part 2 - RF Amplifier Sub-Chassis			
REF DESIG	NOTES	NAME AND DESCRIPTION	FIG. NO.
C223		CAPACITOR, FIXED, MICA DIELECTRIC: 18 pF, ± 5%, 500 Vdcw, MIL type CM15D180J. Part of T206.	6-19
C224		Same as C219. Part of T206.	6-19
C225		CAPACITOR ASSEMBLY: Variable, air dielectric, consisting of C225-A, and C225-B (13499) drawing no. 922-0208.	6-19
C225A		CAPACITOR, VARIABLE: front section 7 to 80 pF ± 4 pF, 800 Vac, part of C225.	6-19
C225B		CAPACITOR, VARIABLE: rear section 6-26 pF + 2 pF, 800 Vac, part of C225.	6-19
C226		CAPACITOR, FIXED, CERAMIC DIELECTRIC: 5000 pF, ± 15%, 1000 Vdcw, (13499) drawing no. 913-2349-00.	6-20
C227	1	CAPACITOR, FIXED, PAPER DIELECTRIC: 47,000 pF, ± 20%, 100 Vdcw (56289) part no. 186P4730155.	6-20
C228		CAPACITOR, FIXED, CERAMIC DIELECTRIC: 1 pF, ± 0.25 pF, 500 Vdcw MIL type CX20CK010C.	6-20
C229		Same as C226.	6-20
C230-1	1	CAPACITOR, VARIABLE, CERAMIC DIELECTRIC: 8-75 pF, 350 Vdcw (13499) drawing no. 917-1122-00. Part of Z201-1.	6-19
C230-2	1	Same as C230-1. Part of Z201-2.	6-19
C231-1	1	CAPACITOR, FIXED, MICA DIELECTRIC: 160 pF, ± 2%, 500 Vdcw (72136) type no. 605. Part of Z201-1.	6-19
C231-2	1	Same as C231-1. Part of Z201-2.	6-19
C232-1	1	CAPACITOR, FIXED, MICA DIELECTRIC: 2400 pF, ± 2%, 300 Vdcw, MIL type VCM20E242G. Part of Z201-1.	6-19
C232-2	1	Same as C232-1. Part of Z201-2.	6-19
C233-1		Same as C230-1. Part of Z202-1.	6-19
C233-2		Same as C230-1. Part of Z202-2.	6-19
C234-1		CAPACITOR, FIXED, MICA DIELECTRIC: 1800 pF, ± 2%, 500 Vdcw, MIL type CM15D181G. Part of Z202-1.	6-19
C234-2		Same as C234-1. Part of Z202-2.	6-19
C235-1		CAPACITOR, FIXED, MICA DIELECTRIC: 2400 pF, ± 2%, 300 Vdcw, MIL type CVM20E242G. Part of Z202-1.	6-19
C235-2		Same as C235-1. Part of Z202-2.	6-19

Parts List: Part 2 - RF Amplifier Sub-Chassis			
REF DESIG	NOTES	NAME AND DESCRIPTION	FIG. NO.
C236-1		Same as C230-1. Part of Z203-1.	6-19
C236-2		Same as C230-1. Part of Z203-2.	6-19
C237-1		Same as C204. Part of Z203-1.	6-19
C237-2		Same as C204. Part of Z203-2.	6-19
C238-1		CAPACITOR, FIXED, MICA DIELECTRIC: 1500 pF, ± 10%, 300 Vdcw (13499) drawing no. 935-5078-00. Part of Z203-1.	6-19
C238-2		Same as C238-1. Part of Z203-2.	6-19
C239-1		CAPACITOR, VARIABLE, CERAMIC DIELECTRIC: 5 to 37.5 pF, 350 Vdcw (13499) drawing no. 917-1121-00. Part of Z204-1.	6-19
C239-2		Same as C239-1. Part of Z204-2.	6-19
C240-1		CAPACITOR, FIXED, MICA DIELECTRIC: 68 pF, ± 2%, 500 Vdcw, MIL type CM15D680G. Part of Z204-1.	6-19
C240-2		Same as C240-1. Part of Z204-2.	6-19
C241-1		CAPACITOR, FIXED, MICA DIELECTRIC: 470 pF, ± 2%, 300 Vdcw, MIL type CM15D471G. Part of Z204-1.	6-19
C241-2		Same as C241-1. Part of Z204-2.	6-19
C242-1		CAPACITOR, VARIABLE, CERAMIC DIELECTRIC: 3-18 pF, 350 Vdcw (13499) drawing no. 917-1120-00. Part of Z205-1.	6-19
C242-2		Same as C242-1. Part of Z205-2.	6-19
C243-1		Same as C240-1. Part of Z205-1.	6-19
C243-2		Same as C240-1. Part of Z205-2.	6-19
C244-1		Same as C234-1. Part of Z205-1.	6-19
C244-2		Same as C234-1. Part of Z205-2.	6-19
C245-1		Same as C242-1. Part of Z206-1.	6-19
C245-2		Same as C242-1. Part of Z206-2.	6-19
C246-1		CAPACITOR, FIXED, MICA DIELECTRIC: 47 pF, ± 2%, 500 Vdcw, MIL type CM15D470G. Part of Z206-1.	6-19
C246-2		Same as C246-1. Part of Z206-2.	6-19
C247-1		CAPACITOR, FIXED, MICA DIELECTRIC: 33 pF, ± 2%, 500 Vdcw, MIL type CM15D330C. Part of Z206-1.	6-19
C247-2		Same as C247-1. Part of Z206-2.	6-19

Parts List: Part 2 - RF Amplifier Sub-Chassis			
REF DESIG	NOTES	NAME AND DESCRIPTION	FIG. NO.
C248		Same as C226.	6-20
C249		CAPACITOR, FIXED, CERAMIC DIELECTRIC: 0.5 pf, ± 0.25 pF, 500 Vdcw, MIL type CC206K0R5C.	6-20
C250		CAPACITOR, FIXED, CERAMIC DIELECTRIC: 0.75 pF, ± 0.25 pF, 500 Vdcw, MIL type CC20CKR75C.	6-20
C251		Same as C228.	6-20
C252		CAPACITOR, FIXED, CERAMIC DIELECTRIC: 2 pF, ± 0.25%, 500 Vdcw, MIL type CC20CK020C.	6-20
C253		CAPACITOR, FIXED, CERAMIC DIELECTRIC: 4 pF, ± 0.25 pF, 500 Vdcw, MIL type CC20CH040C.	6-20
C254		CAPACITOR, FIXED, CERAMIC DIELECTRIC: 8 pF, ± 0.25 pF, 500 Vdcw, MIL type CC20CH080C.	6-20
C255		Same as C247-1	6-20
C256	1	CAPACITOR, FIXED, PAPER DIELECTRIC: 0.1 uF, ± 10%, 200 Vdcw.	6-21
C257	1	CAPACITOR, FIXED, CERAMIC DIELECTRIC: 47 pF, ± 5%, 500 Vdcw, MIL type CC20UJ470J.	3-5
C273		Same as C226	6-20
C274		Same as C226.	6-20
C275	1	CAPACITOR, FIXED, PAPER DIELECTRIC: 0.033 uF, ± 20%, 300 Vdcw, (56289) part no. 96P33303S4.	6-21
C276		CAPACITOR, FIXED, MICA DIELECTRIC: 15 pF, ± 5%, 500 Vdcw, MIL type CM15D150J.	6-20
C277		Same as C226.	6-20
C278		Same as C276.	6-20
C279		Same as C276.	6-20
C280		Same as C226.	6-21
C281		CAPACITOR, FIXED, CERAMIC DIELECTRIC: 1.5 pF, ± 0.25%, 500 Vdcw, MIL type CC20CK1R5C.	6-21
C282		Same as C281.	6-21
C283-1		Same as C239-1. Part of Z213-1.	6-19
C283-2		Same as C239-1. Part of Z213-2.	6-19
C283-3		Same as C239-1. Part of Z213-3.	6-19

Parts List: Part 2 - RF Amplifier Sub-Chassis			
REF DESIG	NOTES	NAME AND DESCRIPTION	FIG. NO.
C284		Same as C226.	6-21
C285		Same as C226.	6-21
C286		Same as C215.	6-21
C287		Same as C226.	6-21
C288		Same as C226.	6-21
C289		Same as C252.	6-21
C290		Same as C252.	6-21
C291-1		Same as C239-1. Part of Z216-1.	6-19
C291-2		Same as C239-1. Part of Z216-2.	6-19
C291-3		Same as C 239-1. Part of Z216-3.	6-19
C292-1		Same as C215. Part of Z216-1.	6-19
C292--2		Same as C215. Part of Z216-2.	6-19
C292- 3		Same as C215. Part of Z216-3.	6-19
C293 through C296		Not used	
C297		Same as C226.	6-21
C298		Same as C226.	6-21
C299		CAPACITOR. FIXED, MICA DIELECTRIC: 270 pF, ± 2%, 300 Vdcw, MIL type CM15D271G, part of T-208, listed for reference only.	6-19
C300		Same as C226.	6-20
C301		Same as C226.	6-20
C302		Same as C226.	6-21
C303		Same as C226.	6-21
C304		Same as C226.	6-21
C305		Same as C226.	6-21
C307		Same as C226.	6-21
C308		Same as C226.	6-21
C309		Same as C256.	6-21
C310		CAPACITOR, VARIABLE, AIR DIELECTRIC: 3.2 pF to 60.7 pF, 850 Vac (74970) type no. 160-110-4.	6-21

Parts List: Part 2 - RF Amplifier Sub-Chassis			
REF DESIG	NOTES	NAME AND DESCRIPTION	FIG. NO.
C311		CAPACITOR, FIXED, MICA DIELECTRIC: 1000 pF, ± 2%, 500 Vdcw, MIL type CM30D102G.	6-21
C312		CAPACITOR, FIXED, MICA DIELECTRIC: 150 pF, ± 2%, 500 Vdcw, MIL type CM15D151G.	6-21
C313		CAPACITOR, FIXED, MICA DIELECTRIC: 220 pF, ± 2%, 500 Vdcw, MIL type CM15D221G.	6-21
C314		Same as C313.	6-21
C315		Same as C313.	6-21
C316		Same as C276.	6-21
C317		Same as C102.	6-21
C318		CAPACITOR, FIXED, MICA DIELECTRIC: 51 pF, ± 2%, 500 Vdcw, MIL type CM15D510G.	6-21
C319		Same as C226.	6-21
C320		Same as C311.	6-21
C321		Same as C220.	6-20
C322		Same as C220.	6-20
C323		Same as C219	6-20
C324		CAPACITOR, FIXED, MICA DIELECTRIC: 20 pF, ± 5%, 300 Vdcw, MIL type CM15D200J.	6-21
C325		CAPACITOR, FIXED, MICA DIELECTRIC: 200 pF, ± 1%, 500 Vdcw.	6-21
C326		Same as C226.	6-21
C327		Same as C215.	6-21
C328		Same as C226.	6-21
C329		Same as C240-1.	6-21
C330-1		CAPACITOR, FIXED, MICA DIELECTRIC: 300 pF, ± 2%, 500 Vdcw, MIL type CM15D301G. Part of Z201-1.	6-19
C330-2		Same as C330-1. Part of Z201-2.	6-19
C331-1		Same as C240-1. Part of Z202-1.	6-19
C331-2		Same as C240-1. Part of Z202-2.	6-19
C334		Same as C318.	6-21

Parts List: Part 2 - RF Amplifier Sub-Chassis			
REF DESIG	NOTES	NAME AND DESCRIPTION	FIG. NO.
E201		SHIELD, ELECTRON TUBE: Medium 7 pin: (98738) part no. CWS6P202262, type 99X.	6-19
E202		Same as E201.	6-19
E203		Same as E201.	6-19
E204		Same as E201.	6-19
E205		SHIELD, ELECTRON TUBE: Medium 9 pin: (98738) part no. 26N205116.	6-19
E206		Same as E205.	6-19
E207		SHIELD, ELECTRON TUBE: Short 7 pin: (98738) part no. 26N205117.	6-19
E208		JACK, TIP: 1 female contact (98291) type No. SKT-1.	6-19
E209		Same as E208.	6-19
E210		Same as E208.	6-19
E211		Same as E208.	6-19
E212		SUPPRESSOR, PARASITIC: 270 ohms, 1/2 W, (13499) drawing no. 540-7869-002.	6-20
E213	2	CORE, ADJUSTABLE, TUNING: Part of L212 arid L213.	6-19
E214	2	Same as E213: Part of L214 and L215.	6-19
E215	2	Same as E213: Part of L216 and L217.	6-19
E216	2	Same as E213: Part of L218 and L219.	6-19
E217	2	Same as E213: Part of L220 and L221.	6-19
E218	2	Same as E213: Part of L222 and L223.	6-19
E219-1	2	Same as E213: Part of L224-1.	6-19
E219-2	2	Same as E213: Part of L224-2.	6-19
E220-1	2	Same as E213: Part of L225-1.	6-19
E220-2	2	Same as E213: Part of L225-2.	6-19
E221-1	2	Same as E213: Part of L226-1.	6-19
E221-2	2	Same as E213: Part of L226-2.	6-19
E222-1	2	Same as E213: Part of L227-1.	6-19

Parts List: Part 2 - RF Amplifier Sub-Chassis			
REF DESIG	NOTES	NAME AND DESCRIPTION	FIG. NO.
E222-2	2	Same as E213: Part of L227-2.	6-19
E223-1	2	Same as E213: Part of L228-1.	6-19
E223-2	2	Same as E213: Part of L228-2.	6-19
E224-1	2	Same as E213: Part of L229-1.	6-19
E224-2	2	Same as E213: Part of L229-2.	6-19
E225-1	2	CORE, ADJUSTABLE, TUNING: Part of L232-1.	6-19
E225-2	2	Same as E225-1: Part of L232-2.	6-19
E225-3	2	Same as E225-1: Part of L232-3.	6-19
E226-1	2	Same as E225-1: Part of L233-1.	6-19
E226-2	2	Same as E225-1: Part of L233-2.	6-19
E226-3	2	Same as E225-1: Part of L233-3.	6-19
E227		INSULATOR VFO SHAFT: (80063) drawing no. SM-B-178491 (index no. 171).	6-36
E228 through E230		Not used.	
E231		TERMINAL:	
E232		Same as E231.	
E233		Same as E231.	
E234		Same as E231.	
E235		Same as E231.	
H201		WASHER, LOCK: No. 8 split (index no. 12).	6-36
H202		WASHER, LOCK: No. 4 split (index no. 18).	6-36
H203		WASHER, LOCK No. 6 split, MIL type MS35338-79 (Index no. 68).	6-36
H204 through H211		Not used.	
H212		WASHER, LOCK: No. 5 split (index no. 29).	6-36
H213		RING, RETAINING: 7/16 in., (80063) drawing no. SM-B-283171-3 (index no. 4).	6-36

Parts List: Part 2 - RF Amplifier Sub-Chassis			
REF DESIG	NOTES	NAME AND DESCRIPTION	FIG. NO.
H214		WASHER, FLAT: 5/16 in. (Index no. 113).	6-36
H215		SCREW, MACHINE: Socket head, 4-40 thread x 1/2 in. 1 (index no. 35).	6-36
H216		SCREW, MACHINE: Binder head, recessed drive, 6-32 thread x 1/4 in. 1, MIL type MS35216-23 (index no. 67).	6-36
H217		SCREW, MACHINE: Socket head, 3-56 thread x 1/4 in. 1 (index no. 7).	6-36
H218		SCREW, MACHINE: Socket head, 4-40 thread x 9/16 in. 1, (80063) drawing no. SM-D-343600-6 (index no. 11).	6-36
H219		NUT, SQUARE: Steel, 4-40 thread, (80063) drawing no. SM-D-343600-7 (index no. 5).	6-36
H220		SET SCREW: Steel, 8-32 thread x 1/8 in. I (index no. 177).	6-36
H221		RING, RETAINING: 1/8 In. E-type: (80063) drawing no. SM-B-283174-1 (index no. 102).	6-36
H222		RING, RETAINING: 1/4 in. E-type: (80063) drawing no. SM-B-283174-3 (index no. 85).	6-36
H223		RING, RETAINING: 3/16 in. (index no. 176).	6-36
H224		RING, RETAINING: 1/4 in. (index no. 41).	6-36
H225		SCREW, MACHINE: Flat head, 6-32 thread x 3/8 in. I (index no. 126).	6-36
H226		SCREW, MACHINE: Flat head, recessed drive, 8-32 thread x 5/16 in. 1 (index no. 107).	6-36
H227		SCREW, MACHINE: Pan head, recessed drive, steel, 4-40 thread x 5/16 in. 1 (index no. 19).	6-36
H228		SCREW, MACHINE: Pan head, recessed drive, steel, 6-32 thread x 3/16 in. 1 (index no. 26).	6-36
H229		SCREW, MACHINE: Pan head, recessed drive, steel, 6-32 thread x 3/8 in. 1 (index no. 130).	6-36
H230		SCREW, MACHINE: Binder head, recessed drive, steel, 8-32 thread x 3/8 in. 1 (index no. 13).	6-36
H231		CLAMP, GEAR: (80063) drawing no. SM-B-343586 (index no. 8).	6-36
H232		WASHER, SPECIAL: (index no. 175).	
H233		CLAMP, GEAR: For cam shaft, 0. 312 in. hole. (80063) drawing no. SM-B-178414 (index No. 34).	6-36
H234		RING, RETAINING: (89462) part no. 5100-31-C (index no. 47).	6-36

Parts List: Part 2 - RF Amplifier Sub-Chassis			
REF DESIG	NOTES	NAME AND DESCRIPTION	FIG. NO.
H235		POST, PANEL SPACING: Al, anodized, rd, 1/4 in. x 1-3/8 in. 1 (index no. 97).	6-36
H236		Same as H235 (index no. 40).	6-36
H237		RING RETAINING: (894 32) part no. 5133-18-C (index no. 88).	6-36
H240		SCREW, SPECIAL: (index no. 28).	6-36
H241		SCREW, MACHINE: Pan head, recessed drive, steel 4-40 thread x 1/4 in. 1 (index no. 55).	6-36
H242		POST, PANEL SPACING: Al, anodized, 9/16 in. I (index no. 152).	6-36
H243		POST, PANEL,SPACING: Al, anodized, 4-13/16 in. I (index no. 156).	6-36
H244		POST, PANEL SPACING: Steel, 5-5/8 in. I (index no. 148).	6-36
H245		CLAMP, HELICAL GEAR: (80063) drawing no. SM-B-248934 (index no. 173).	6-36
H246 through H250		Not used.	6-36
H251		\VASHER, SHIM: (index no. 16).	6-36
H252		Same as H213.	
H253		WASHER, SHIM: (index no. 105).	6-36
H254		WASHER: (index no. 76).	6-36
H255		SCREW, MACHINE: Steel, 6-32 thread x 7/16 in. 1 (index no. 119).	6-36
H291		WASHER, FLAT: No. 6, (98738) part no. 572037-3 (index no. 69).	6-36
HR202		OVEN, CRYSTAL: (75378) type no. JK09.	6-19
J201 through J207		Not used.	
J208		CONNECTOR, RECEPTACLE, ELECTRICAL: 9 male contacts; (02660) type no. 26-012.	6-19
J209 through J216		Not used.	
J217		CONNECTOR, RECEPTACLE, ELECTRICAL: 1 female contact, (30684) type 46475.	6-19

Parts List: Part 2 - RF Amplifier Sub-Chassis			
REF DESIG	NOTES	NAME AND DESCRIPTION	FIG. NO.
J218 through J220		Not used.	
J221		Same as J217	6-19
L201		COIL, RADIO FREQUENCY: 500 uH; (95265) part no. C0047109.	6-21
L202		COIL, RADIO FREQUENCY: 10 uH (82142) part no. 10102-32.	6-20
L203		Same as L202.	6-20
L204		Same as L202.	6-21
L205		Same as L202.	6-21
L206		Same as L202.	6-21
L207		Same as L202.	6-21
L208		Same as L201.	6-21
L209		Same as L201.	6-21
L210		COIL, RADIO FREQUENCY: 0.68 uH (82142) part no. 10100-28.	6-21
L211		Same as L201.	6-21
L212	2	COIL, RADIO FREQUENCY: Part of T201, listed for reference only.	6-19
L213	2	Same as L212.	6-19
L214	2	COIL, RADIO FREQUENCY: Part of T202, listed for reference only.	6-19
L215	2	Same as L214.	6-19
L216	2	COIL, RADIO FREQUENCY: Part of T203, listed for reference only.	6-19
L217	2	Same as L216.	6-19
L218	2	COIL, RADIO FREQUENCY: Part of T204, listed for reference only.	6-19
L219	2	Same as L218.	6-19
L220	2	COIL, RADIO FREQUENCY: Part of T205, listed for reference only.	6-19
L221	2	Same as L220.	6-19
L222	2	COIL, RADIO FREQUENCY: Part of T206, listed for reference only.	6-19
L223	2	Same as L222.	6-19
L224-1	2	COIL, TUNED CIRCUIT: Part of Z201-1, listed for reference only.	6-19
L224-2	2	COIL, TUNED CIRCUIT: Part of Z201-2, listed for reference only.	6-19
L225-1	2	COIL, TUNED CIRCUIT: Part of Z202-1, listed for reference only.	6-19

Parts List: Part 2 - RF Amplifier Sub-Chassis			
REF DESIG	NOTES	NAME AND DESCRIPTION	FIG. NO.
L225-2	2	COIL, TUNED CIRCUIT: Part of Z202-2, listed for reference only.	6-19
L226-1	2	COIL, TUNED CIRCUIT: Part of Z203-1, listed for reference only.	6-19
L226-2	2	COIL, TUNED CIRCUIT: Part of Z203-2, listed for reference only.	6-19
L227-1	2	COIL, TUNED CIRCUIT: Part of Z204-1, listed for reference only.	6-19
L227-2	2	COIL, TUNED CIRCUIT: Part of Z204-2, listed for reference only.	6-19
L228-1	2	COIL, TUNED CIRCUIT: Part of Z205-1, listed for reference only.	6-19
L228-2	2	COIL, TUNED CIRCUIT: Part of Z205-2, listed for reference only.	6-19
L229-1	2	COIL, TUNED CIRCUIT: Part of Z206-1, listed for reference only.	6-19
L229-2	2	COIL, TUNED CIRCUIT: Part of Z206-2, listed for reference only.	6-19
L230	2	COIL, TUNED CIRCUIT: Part of T207, listed for reference only.	6-19
L231	2	Same as L230.	6-13
L232-1	2	COIL, TUNED CIRCUIT: Part of Z213-1, listed for reference only.	6-19
L232-2	2	COIL, TUNED CIRCUIT: Part of Z213-2, listed for reference only.	6-19
L232-3	2	COIL, TUNED CIRCUIT: Part of Z213-3, listed for reference only.	6-19
L233-1	2	COIL, TUNED CIRCUIT: Part of Z216-1, listed for reference only.	6-19
L233-2	2	COIL, TUNED CIRCUIT: Part of Z216-2, listed for reference only.	6-19
L233-3	2	COIL, TUNED CIRCUIT: Part of Z216-3, listed for reference only.	6-19
L234		COIL, TUNED CIRCUIT: Part of T208, listed for reference only.	6-19
L235		Same as L234.	619
L236		COIL, RADIO FREQUENCY: 10 uH.	6.21
M201		COUNTER, ROTATING, FIXED MOUNTING: (80063) drawing no. SM-C-249195 (index no. 17). (Attaching Parts) SCREW, MACHINE: Pan head, recessed drive, steel, 4-40 thread x 1/4 in. 4 required. WASHER, FLAT: Steel, no. 4 - 4 required.	6-36
0201		GEAR SPUR: (80063) drawing no. SM-B-178912 (index no. 44).	6-36
0202		GEAR, BEVEL: (80063) drawing no. SM-C-178700 (index no. 9).	6-36

Parts List: Part 2 - RF Amplifier Sub-Chassis			
REF DESIG	NOTES	NAME AND DESCRIPTION	FIG. NO.
0203		GEAR, SPUR: (80063) drawing no. SM-B-178701 (index no. 103).	6-36
0204		GEAR, SPUR: (80063) drawing no. SM-C-178702 (index no. 36).	6-36
0205		GEAR ASSEMBLY, SPUR: (80063) drawing no. SM-B-178935 (index no. 42).	6-36
0206		SHAFT, DIFFERENTIAL: (index no. 73).	6-36
0207		CLAMP, GEAR: (80063) drawing no. SM-B-178486 (index no. 6).	6-36
0208		Same as 0207 (index no. 46).	6-36
0209		Same as 0207 (index no. 52).	6-36
0210		Same as 0207 (index no. 115).	6-36
0211		Same as 0207 (index no. 83).	6-36
0212		GEAR, BEVEL: (80063) drawing no. SM-B-178707 (index no. 24)	6-36
0213		Same as 0212 (index no. 10).	6-36
0214		Not used.	
0215		BUSHING, SHAFT: (index no. 38).	6-36
0216 And 0217		Not used.	
0218		GEAR, SPUR: (80063) drawing no. SM-C-179063 (index no. 90).	6-36
0219		GEAR ASSEMBLY, FINAL DIFFERENTIAL: Consisting of cluster gears, 0219-A, 0219-B, 0219-C, and 0219-D (index no. 39).	6-36
0219-A		GEAR, CLUSTER: Part of 0219, listed for reference only.	6-36
0219-B		GEAR, CLUSTER: Part of 0219, listed for reference only.	6-36
0219-C		GEAR, CLUSTER: Part of 0219, listed for reference only.	6-36
0219-D		GEAR, CLUSTER: Part of 0219, listed for reference only.	6-36
0220		Not used.	
0221		BUSHING, GEAR: (index no. 14).	6-36
0222		BUSHING, GEAR: (index no. 77).	6-36
0223		BUSHING, GEAR: (index no. 78).	6-36

Parts List: Part 2 - RF Amplifier Sub-Chassis			
REF DESIG	NOTES	NAME AND DESCRIPTION	FIG. NO.
0224 through 0235		Not used.	
0236		SHAFT, ANTENNA TRIMMER: (index no. 170).	6-36
0237 through 0239		Not used.	
0240		HUB, OSCILLATOR DIAL: (index no. 124).	6-36
0241		GEAR, SPUR: (index no. 117).	6-36
0242		BUSHING, GEAR: (index no. 37).	6-36
0243		GEAR, SPUR: (80063) drawing no. SM-B-248907 (index no. 79).	6-36
0244		SPRING, DETENT: (index no. 70).	6-36
0245		GEAR, SPUR: (index no. 93).	6-36
0246		GEAR ASSEMBLY, SPUR: (80063) drawing no. SM-B-248938 (index no. 95).	6-36
0247		SPRING, HELICAL, EXTENSION: (80063) drawing no. SM-B-178785 (index no. 129).	6-36
0248 through 0251		Not used.	
0252		POST, STAKED GEAR: Gear drive for mechanical rotating counter M201; (index no. 27).	6-36
0253		GEAR, SPUR: (index no. 86).	6-36
0254		GEAR, SPUR: (80063) drawing no. SM-B-248902 (index no. 49)	6-36
0255		Not used.	
0256		BUSHING, HELICAL GEAR: (index no. 174).	6-36
0257 through 0260		Not used.	
0261		GEAR ASSEMBLY, SPUR: (80063) drawing no. SM-B-248943 (index no. 74).	6-36
0262		GEAR, SOLDERED: (index no. 129).	6-36
0263 through 0272		Not used.	

Parts List: Part 2 - RF Amplifier Sub-Chassis			
REF DESIG	NOTES	NAME AND DESCRIPTION	FIG. NO.
0273		Same as 0247 (index no. 65).	6-36
0274		GEAR, SPUR: (index no. 134).	6-36
0275 through 0282		Not used.	
0283		GEAR, SPUR: (04713) part no. 244B4510 (index no. 110).	6-36
0284 through 0294		Not used.	
0295		GEAR ASSEMBLY, LOCKED CLUTCH: Consisting of spur gears, 0295-A, 0295-B, and 0295-C: (80063) drawing no. SM-C-248967 (index no. 21).	6-36
0295-A		GEAR, SPUR: Part of 0295, listed for reference only.	6-36
0295-B		GEAR, SPUR: Part of 0295, listed for reference only.	6-36
0295-C		GEAR, SPUR: Part of 0295, listed for reference only.	6-36
0296		GEAR, BEVEL: (80063) drawing no. SM-B-178752 (index no. 25).	6-36
0297		GEAR TRAIN ASSEMBLY, RADIO FREQUENCY: (less counter) consisting of 0310 through 0315-7, (13499) drawing no. 540-7528-003.	6-36
0298 through 0305		Not used.	
0306		PLATE ASSEMBLY, CAM: (80063) SM-B-343594 (index no. 179).	6-36
0307		GEAR ASSEMBLY, SWITCH: Consisting of spur gears, 0307-A, and 0307-B: (80063) drawing no. SM-C-248970 (index no. 87).	6-36
0307-A		GEAR, SPUR: Part of 0307, listed for reference only.	6-36
0307-B		GEAR, SPUR: Part of 0307, listed for reference only.	6-36
0308 and 0309		Not used.	
0310		CAM ASSEMBLY, HF TUNING: 16.0 to 32.0 MHz tuning, consisting of 0310-1, 0310-2, 0310-3, 0310-4, and 0310-5.	6-36
0310-1		CAM LOBE, FRONT: Part of 0310, listed for reference only (index no. 142).	6-36

Parts List: Part 2 - RF Amplifier Sub-Chassis			
REF DESIG	NOTES	NAME AND DESCRIPTION	FIG. NO.
0310-2		PIN, NO. 6 TAPER: Part of 0310, listed for reference only (index no. 143).	6-36
0310-3		CAM LOBE, REAR: Part of 0310, listed for reference only (index no. 165).	6-36
0310-4		PIN, NO. 6 TAPER: Part of 0310, listed for reference only (index no. 166).	6-36
0310-5		SHAFT, CAM TRANSVERSE: Part of 0310, listed for reference only (index no. 168).	6-36
0311		CAM ASSEMBLY, RF TUNING: 0.5 to 1.0 MHz tuning, consisting of 0311-1, 0311-2, 0311-3, 0311-4, and 0311-5,	6-36
0311-1		CAM LOBE, FRONT: Part of 0311, listed for reference only (index no. 56).	6-36
0311-2		PIN, NO. 6 TAPER: Part of 0311, listed for reference only (index no. 57).	6-36
0311-3		CAM LOBE, REAR: Part of 0311, listed for reference only (index no. 157).	6-36
0311-4		PIN, NO. 6 TAPER: Part of 0311, listed for reference only (index no. 158).	6-36
0311-5		SHAFT, CAM TRANSVERSE: Part of 0311, listed for reference only (index no. 164).	6-36
0312		CAM ASSEMBLY, RF TUNING: 1.0 to 2.0 MHz, and 3.0 to 2.0 MHz intermediate frequency tuning, consisting of 0312-1, 0312-2, 0312-3, 0312-4, 0312-5, 0312-6, and 0312-7.	6-36
0312-1		CAM LOBE, FRONT: Part of 0312, listed for reference only (index no. 146).	6-36
0312-2		PIN, NO. 6 TAPER: Part of 0312, listed for reference only (index no. 147).	6-36
0312-3		CAM LOBES, INNER: Part of 0312, listed for reference only (index no. 153).	6-36
0312-4		PIN, NO. 6 TAPER: Part of 0312, listed for reference only (index no. 154).	6-36
0312-5		SHAFT, CAM TRANSVERSE: Part of 0312, listed for reference only (index no. 184).	6-36

Parts List: Part 2 - RF Amplifier Sub-Chassis			
REF DESIG	NOTES	NAME AND DESCRIPTION	FIG. NO.
0312-6		CAM LOBE, REAR: Part of 0312, listed for reference only (index no. 185).	6-36
0312-7		PIN, NO. 6 TAPER: Part of 0312, listed for reference only (index no. 186).	6-36
0313		CAM ASSEMBLY, RF TUNING: 2.0 to 4.0 MHz tuning, consisting of 0313-1, 0313-2, 0313-3, 0313-4, and 0313-5.	6-36
0313-1		CAM LOBE, FRONT: Part of 0313, listed for reference only (index no. 60).	6-36
0313-2		PIN, NO. 6 TAPER: Part of 0313, listed for reference only (index no. 61).	6-36
0313-3		Same as 0313-2 (index no. 159).	6-36
0313-4		CAM LOBE, REAR: Part of 0313, listed for reference only (index no. 162).	6-36
0313-5		SHAFT, CAM TRANSVERSE: Part of 0313, listed for reference only (index no. 163).	6-36
0314		CAM ASSEMBLY, RF TUNING: 4.0 to 8.0 MHz tuning, consisting of 0314-1, 0314-2, 0314-3, 0314-4, and 0314-5.	6-36
0314-1		CAM LOBE, FRONT: Part of 0314, listed for reference only (index no. 144).	6-36
0314-2		PIN, NO. 6 TAPER: Part of 0314, listed for reference only (index no. 145).	6-36
0314-3		CAM LOBE, REAR: Part of 0314, listed for reference only (index no. 155).	6-36
0314-4		Same as 0314-2 (index no. 167).	6-36
0314-5		SHAFT, CAM TRANSVERSE: Part of 0314, listed for reference only (index no. 169).	6-36
0315		CAM ASSEMBLY, RF TUNING: 8.0 to 16.0 MHz, and 17.5 to 25.0 MHz tuning, consisting of 0315-1, 0315-2, 0315-3, 0315-4, 0315-5, 0315-6, and 0315-7: (80063) drawing no. SM-C-248959.	6-36
0315-1		GEAR AND CAM LOBE ASSEMBLY, FRONT: Part of 0315, listed for reference only (index no. 62).	6-36
0315-2		PIN, NO. 6 TAPER: Part of 0315, listed for reference only (index no. 75).	6-36
0315-3		CAM LOBES, INNER: Part of 0315, listed for reference only (index no. 160).	6-36

Parts List: Part 2 - RF Amplifier Sub-Chassis			
REF DESIG	NOTES	NAME AND DESCRIPTION	FIG. NO.
0315-4		Same as 0315-2 (index no, 161).	6-36
0315-5		SHAFT, CAM TRANSVERSE: Part of 0315, listed for reference only (index no. 183).	6-36
0315-6		CAM LOBE, REAR: Part of 0315, listed for reference only (index no. 187)	6-36
0315-7		Same as 0315-2 (index no. 188).	6-36
0316		STOP ASSEMBLY: (80063) drawing no. SM-C-343597 (index no. 94).	6-36
0317		STOP ASSEMBLY: (80063) drawing no. SM-C-343598 (index no. 101).	6-36
0318		GEAR, HELICAL DRIVER: (index no. 172).	6-36
0319		SPRING, MULTITURN GEAR: (index no. 89).	6-36
0320		Not used.	
0321		GEAR, SPUR: (80063) drawing no. SM-B-248952 (index no. 91).	6-36
0322		Same as 0247 (index no. 3).	6-36
0323		GEAR, SPUR: (80063) drawing no. SM-B-248932 (index no. 2).	6-36
0324		GEAR, SPUR: (80063) drawing no. SM-C-178930 (index no. 64).	6-36
0325		Same as 0247 (index no. 50).	6-36
0326 and 0327		Not used.	
0328		GEAR, SPUR: (80063) drawing no. SM-C-178931 (index no. 63).	6-36
0329 through 0331		Not used.	
0332		SPRING, HELICAL, EXTENSION: (04713) part no. 341B286.	
0333 through 0343		Not used.	
0344		SPRING, HELICAL, EXTENSION: (80063) drawing no. SM-B-178699.	
0345 through 0362		Not used.	
0363		GEAR SPUR: (80063) drawing no. SM-B-178912 (index no, 53)	6-36

Parts List: Part 2 - RF Amplifier Sub-Chassis			
REF DESIG	NOTES	NAME AND DESCRIPTION	FIG. NO.
0364 through 0389		Not used.	
0390		GEAR ASSEMBLY, SPUR: (80063) drawing no. SM-B-248939 (index no. 66)	6-36
0391		Not used.	
0392		GEAR, SPUR: (80063) drawing no. SM-B-248944 (index no. 48)	6-36
0393		GEAR, SPUR: (04713) part no. 344B243.	
0394		GEAR, SPUR: (04713) part no. 344B24589-1.	
0394-E		GEAR ASSEMBLY:	
0395		GEAR ASSEMBLY:	
0396		GEAR ASSEMBLY:	
0397		GEAR ASSEMBLY:	
P201 through P204		Not used.	
P205		CONNECTOR, PLUG, ELECTRICAL: 1 female contact, 90° angle, (30684) part no. 45300.	6-14
P206		CONNECTOR, PLUG, ELECTRICAL: 1 female contact, 90 angle, (30684) part no. 45400.	6-14
P207		Same as P206.	6-14
P208 through P212		Not used.	
P213		CONNECTOR, PLUG, ELECTRICAL: 1 female contact, (30684) part no. 45425.	6-14
P214		Not used.	
P215		Same as P206.	614
P216 and P217		Not used.	
P218		Same as P213.	6-14
P219 and P220		Not used.	

Parts List: Part 2 - RF Amplifier Sub-Chassis			
REF DESIG	NOTES	NAME AND DESCRIPTION	FIG. NO.
R201		RESISTOR, FIXED, COMPOSITION: 270,000 ohm, ± 10%, 1/2 W, MIL type RC20F274K.	6-20
R202		RESISTOR, FIXED, COMPOSITION: 220 ohm, ± 10%, 1/2 W, MIL type RC20GF221K.	6-20
R203		RESISTOR, FIXED, COMPOSITION: 82,000 ohm, ± 10%, 1/2W, MIL type RC20GF823K.	6-20
R204		RESISTOR, FIXED, COMPOSITION: 10,000 ohm, ± 10%, 1/2 W, MIL type RC20GF103K.	6-20
R205		RESISTOR, FIXED, COMPOSITION: 2200 ohm, ± 10%, 1/2 W, - MIL type RC20GF222K.	6-20
R206		RESISTOR, FIXED, COMPOSITION: 22, 000 ohm, a 10%, 1/2 W,.. MIL type RC20GF223K.	6-21
R207		RESISTOR, FIXED, COMPOSITION: 120,000 ohm, ± 10%, 1/2 W, MIL type RC20GF124K.	6-21
R208		RESISTOR, FIXED, COMPOSITION: 27 ohm, ± 10%, 1/2 W, MIL type RC20GF270K.	6-20
R209		Same as R205.	6-20
R210	8	RESISTOR, FIXED, COMPOSITION: 56,000 ohm, a 10%, 1/2 W, MIL type RC20GF563K.	6-21
R211		RESISTOR, FIXED, COMPOSITION: 8200 ohm, a 10%, 1/2 W, MIL type RC20GF822K.	6-21
R212		Same as R205.	6-21
R213		RESISTOR, FIXED, COMPOSITION: 1 meg, a 10%, 1/2 W, MIL type RC20GF105K.	6-21
R214		Same as R208.	6-21
R215		Same as R205.	6-21
R216		Same as R205.	6-21
R217		RESISTOR, FIXED, COMPOSITION: 470,000 ohm, a 10%, 1/2W, MIL type RC20GF474K.	6-21
R218		Same as R205.	6-21
R219		Same as R205.	6-21
R220		RESISTOR, FIXED, COMPOSITION: 330, 000 ohm, a 10%, 1/2 W, MIL type RC20GF334K.	6-21
R221		RESISTOR, FIXED, COMPOSITION: 39,000 ohm, a 10%, 1W, MIL type RC32GF393K.	6-21

Parts List: Part 2 - RF Amplifier Sub-Chassis			
REF DESIG	NOTES	NAME AND DESCRIPTION	FIG. NO.
R222		Same as R206.	6-21
R223		RESISTOR, FIXED, COMPOSITION: 100,000 ohm, ± 10%, 1/2W, MIL type RC20GF104K.	6-21
R224		Same as R204.	6-21
R225		Same as R206.	6-21
R226		Same as R204.	6-21
R227		Same as R213.	6-21
R228		RESISTOR, FIXED, COMPOSITION: 5600 ohm, ± 10%, 1 W, MIL type RC32GF562K.	6-21
R229		RESISTOR, FIXED, COMPOSITION: 33 ohm, a 10%, 1/2 W, MIL type RC20GF330K.	6-21
R230		Same as R208.	6-21
R231		Same as R213.	6-20
R232		Same as R206.	6-20
R233		Same as R217.	6-20
R234		RESISTOR, FIXED, COMPOSITION: 1.5 meg, a 10%, 1/2W, MIL type RC20GF155K.	6-20
R235		RESISTOR, FIXED, COMPOSITION: 47 ohm, a 10%, 1/2 W, MIL type RC20GF470J.	6-20
S201		SWITCH SECTION, ROTARY: 1 moving contact, 7 fixed contacts, 1 pole; (13499) drawing no. 269-1727-00.	6-20
S202		Same as S201.	6-20
S203		SWITCH SECTION, ROTARY: 2 moving contacts, 8 fixed, 2 poles; (13499) drawing no. 269-1723-00. V	6-20
S204		SWITCH SECTION, ROTARY: 2 moving contacts, 13 fixed, 1 pole; (13499) drawing no. 269-1729-00.	6-20
S205		Same as S201.	6-20
S206		Same as S201.	6-20
S207		Same as S201.	6-20
S208		SWITCH SECTION, ROTARY: 3 moving contacts, 8 fixed, 3 poles; (13499) drawing no. 269-1730-00.	6-21

Parts List: Part 2 - RF Amplifier Sub-Chassis			
REF DESIG	NOTES	NAME AND DESCRIPTION	FIG. NO.
T201		TRANSFORMER, RADIO FREQUENCY: 0.5 to 1.0 MHz frequency range, consisting of C201A, C201B, C202, C203, C204, E213, L212, and L213 (13499) drawing no. 540-7893-004. (Attaching Parts) NUT, HEX: Steel, 4-40 thread - 2 required, WASHER, LOCK: No. 4 - 2 required.	6-19
T202		TRANSFORMER, RADIO FREQUENCY: 1.0 to 2.0 MHz frequency range, consisting of C205A, C205B, C206, C207, C208, E214, L214, and L215 (13499) drawing no. 540-7894-004. (Attaching Parts) NUT, HEX: Steel, 4-40 thread - 2 required. WASHER, LOCK: No. 4 - 2 required.	6-19
T203		TRANSFORMER, RADIO FREQUENCY: 2.0 to 4.0 MHz frequency range, consisting of C209A, C209B, C210, C211, C212, E215, L216, and L217 (13499) drawing no. 540-7895-004. (Attaching Parts) NUT, HEX: Steel, 4-40 thread - 2 required. WASHER, LOCK: No. 4 - 2 required.	6-19
T204		TRANSFORMER, RADIO FREQUENCY: 4.0 to 8.0 MHz frequency range, consisting of C213A, C213B, C214, C215, C216, E216, L218, and L219 (13499) drawing no. 540-7896-004. (Attaching Parts) NUT, HEX: Steel, 4-40 thread - 2 required. WASHER, LOCK: No. 4 - 2 required.	6-19
T205		TRANSFORMER, RADIO FREQUENCY: 8.0 to 16.0 MHz frequency range, consisting of C217A, C217B, C218, C219, C220, E217, L220, and L221 (13499) drawing no. 540-7897-004. (Attaching Parts) NUT, HEX: Steel, 4-40 thread - 2 required. WASHER, LOCK: No. 4 - 2 required.	6-19

Parts List: Part 2 - RF Amplifier Sub-Chassis			
REF DESIG	NOTES	NAME AND DESCRIPTION	FIG. NO.
T206		TRANSFORMER, RADIO FREQUENCY: 16.0 to 32.0 MHz frequency range, consisting of C221A, C221B, C222, C223, C224, E218. L222, and L223 (13499) drawing no. 540-7893-004. (Attaching Parts) NUT, HEX: Steel, 4-40 thread - 2 required. WASHER, LOCK: No. 4 - 2 required.	6-19
T207		TRANSFORMER, RADIO FREQUENCY: 11.0 to 34.0 MHz frequency range, consisting of L230 and L231 (13499) drawing no. 278-0234-00. (Attaching Parts) NUT, HEX: Steel, 4-40 thread - 2 required. WASHER, LOCK: No. 4 - 2 required.	6-19
T208		TRANSFORMER, INTERMEDIATE FREQUENCY: 455 kHz center frequency, consisting of C299, L234, and L235 (13499) drawing no. 278-0104-00. (Attaching Parts) NUT, HEX: Steel, 4-40 thread - 2 required. WASHER, LOCK: No. 4 - 2 required.	6-19
V201		ELECTRON TUBE: MIL type 6DC6.	6-19
V202		ELECTRON TUBE: MIL type JAN-6C4W.	6-19
V203		Same as V202.	6-19
V204		Same as V202.	6-19
V205		ELECTRON TUBE: MIL type 5814A.	6-19
V206		Same as V205.	6-19
V207		ELECTRON TUBE: MIL type 5654/6AK5W.	6-19
XHR202		SOCKET, ELECTRON TUBE: JAN type TS101P01. (Attaching Parts) SCREW, MACHINE: Filister head, recessed drive, steel, 6-32 thread x 13/32 in. 1 -2 required. NUT, HEX: Steel, 6-32 thread - 2 required. WASHER, LOCK: No. 6 - 2 required. SPACER: Al, anodized, 1/8 in. 1 x 1/4 in. od, drilled for no. 6 screw 2 required.	6-21 6-20

Parts List: Part 2 - RF Amplifier Sub-Chassis			
REF DESIG	NOTES	NAME AND DESCRIPTION	FIG. NO.
XV201		SOCKET, ELECTRON TUBE: JAN type TS102P01. (Attaching Parts) SCREW, MACHINE: Pan head, recessed drive, steel, 4-40 thread x 7/32 in. I -2 required. NUT, HEX: Steel, 4-40 thread - 2 required. WASH ER, LOCK: No. 4 - 2 required.	6-20
XV202		Same as XV201.	6-20
XV203		Same as XV201.	6-21
XV204		Same as XV201.	6-21
XV205		SOCKET, ELECTRON TUBE: JAN type TS103P01. (Attaching Parts) SCREW, MAC HINE: Pan head, recessed drive, steel, 4-40 thread x 7/32 in. 1 -2 required. NUT, HEX: Steel, 4-40 thread - 2 required. WASHER, LOCK: No. 4 - 2 required.	6-21
XV206		Same as XV205.	6-21
XV207		Same as XV201.	6-21
Y201		CRYSTAL UNIT, QUARTZ: 17,000 kHz; MIL type CR-36/U.	6-19
Y203		CRYSTAL UNIT, QUARTZ: 200 kHz; MIL type CR-47/U.	6-19
Z201-1		RF TUNER ASSEMBLY: 0.5 to 1.0 MHz frequency range; including C230-1, C231-1, C232-1, C330-1, E219-1 and L224-1 (13499) drawing no. 540-7899-004. (Attaching Parts) NUT, HEX: Steel, 4-40 thread - 2 required. WASHER, LOCK: No. 4 - 2 required.	
Z201-2		Same as Z201-1, including C230-2, C231-2, C232-2, C330-2, E219-2 and L224-2.	6-19
Z202-1		RF TUNER ASSEMBLY: 1.0 to 2.0 MHz frequency range, including C233-1, C234-1, C235-1, C331-1, E220-1 and L225-1 (13499) drawing no. 540-7900-004. (Attaching Parts) NUT, HEX: Steel, 4-40 thread - 2 required. WASHER, LOCK: No. 4 - 2 required.	6-19

Parts List: Part 2 - RF Amplifier Sub-Chassis			
REF DESIG	NOTES	NAME AND DESCRIPTION	FIG. NO.
Z202-2		Same as Z202-1, including C233-2, C234-2, C235-2, C331-2, E220-2, and L225-2.	6-19
Z203-1		RF TUNER ASSEMBLY: 2.0 to 4.0 MHz frequency range, including C236-1, C237-1, C238-1, E221-1 and L226-1 (13499) drawing no. 540-7901-004. (Attaching Parts) NUT, HEX: Steel, 4-40 tad - 2 required. WASHER, LOCK: No. 4 - 2 required.	6-19
Z203-2		Same as Z203-1, including C236-2, C237-2, C238-2, E221-2 and L226-2.	6-19
Z204-1		RF TUNER ASSEMBLY: 4.0 to 8.0 MHz frequency range; including C239-1, C240-1, C241-1, E222-1 and L227-1 (13499) drawing no. 540-7902-004. (Attaching Parts) NUT, HEX: Steel, 4-40 thread - 2 required. WASHER, LOCK: No. 4- 2 required.	6-19
Z204-2		Same as Z204-1, including C239-2, C240-2, C241-2, E222-2 and L227-2.	6-19
Z205-1		RF TUNER ASSEMBLY: 8.0 to 16.0 MHz frequency range; including C242-1, C243-1, C244-1, E223-1 and L228-1, (13499) drawing no. 540- 7903-004. (Attaching Parts) NUT, HEX: Steel, 4-40 thread - 2 required. WASHER, LOCK: No. 4 - 2 required.	6-19
Z205-2		Same as Z205-1, including C242-2, C243-2, C244-2, E223-2 and L228-2.	6-19
Z206-1		RF TUNER ASSEMBLY: 16.0 to 32.0 MHz frequency range, including C245-1, C246-1, C247-1, E224-1 and L229-1 (13499) drawing no. 540-7904-004. (Attaching Parts) NUT, HEX: Steel, 4-40 thread - 2 required. WASHER, LOCK: No. 4 - 2 required.	6-19
Z206-2		Same as Z206-1, including C245-2, C246-2, C247-2, E224-2 and L229-2.	6-19

Parts List: Part 2 - RF Amplifier Sub-Chassis			
REF DESIG	NOTES	NAME AND DESCRIPTION	FIG. NO.
Z207 through Z212		Not used.	
Z213-1		RF TUNER ASSEMBLY: 17.5 to 25.0 MHz frequency range; including C283-1, E225-1 and L232-1 (13499) drawing no. 540-7906-004. (Attaching Parts) NUT, HEX: Steel, 4-40 thread - 2 required. WASHER, LOCK: No. 4 - 2 required.	6-19
Z213-2		Same as Z213-1, including C283-2, E225-2 and L232-2.	6-19
Z213-3		Same as Z213-1, including C283-3, E225-3 and L232-3.	6-19
Z216-1		RF TUNER ASSEMBLY: 3.0 to 2.0 MHz frequency range, including C 291-1, C292-1, E226-1 and L233-1 (13499) drawing no. 540-7905-004. (Attaching Parts) NUT, HEX: Steel, 4-40 thread - 2 required. WASHER, LOCK: No. 4 - 2 required.	6-19
Z216-2		Same as Z216-1, including C291-2, C292-2, E226-2 and L233-2.	6-19
Z216-3		Same as Z216-1, including C291-3, C292-3, E226-3 and L233-3.	6-19

Parts List: Part 3 - Crystal Oscillator Sub-Chassis			
REF DESIG	NOTES	NAME AND DESCRIPTION	FIG. NO.
C401		CAPACITOR, FIXED, CERAMIC DIELECTRIC: 5000 pF, ± 15%, 1000 Vdcw, (13499) drawing no. 913-2349-00.	6-23
C402		Same as C219.	6-23
C403		Same as C253.	6-23
C404		Same as C253.	6-23
C406		Same as C401.	6-24
C407		Same as C401.	6-23
C408		CAPACITOR, FIXED, CERAMIC DIELECTRIC: 12 pF, ± 5%, 500 Vdcw, MIL type CC20UJ120J.	6-23
C409		Same as C312.	6-23
C410		Same as C401.	6-23
C411		Same as C401.	6-23
C412		Same as C401.	6-23
C413		Same as C401.	6-23
C414		Same as C401.	6-23
C415		Same as C401.	6-23
C417		Same as C312.	6-23
C418		Same as C204.	6-23
C419		Same as C215.	6-23
C420		CAPACITOR, FIXED, MICA DIELECTRIC: 82 pF, ± 2%, 500 Vdcw, MIL type CM15D820G.	6-23
C421		Same as C240-1.	6-23
C422		CAPACITOR, FIXED, MICA DIELECTRIC: 56 pF, ± 2%, 500 Vdcw, MIL type CM15D560G.	6-23
C423		Same as C246-1.	6-23
C424		Same as C212.	6-23
C425		Same as C247-1.	6-23
C426		Same as C223.	6-23
C427		Same as C220.	6-23
C428		Same as C219.	6-23

Parts List: Part 3 - Crystal Oscillator Sub-Chassis			
REF DESIG	**NOTES**	**NAME AND DESCRIPTION**	**FIG. NO.**
C429		CAPACITOR, ASSEMBLY: Variable, ceramic dielectric, 8 sections, 6 sections, 5 to 25 pF, and 2 sections, 8 to 50 pF (13499) drawing no. 9 17-1126-00.	6-22
C430		CAPACITOR ASSEMBLY: Variable, ceramic dielectric, 8 sections, 1 section, 3 to 12 pF, 5 sections, 5 to 25 pF, and 2 sections, 8 to 50 pF (13499) drawing no. 917-1127-00.	6-22
C431		CAPACITOR ASSEMBLY: Variable, ceramic dielectric, 8 sections, 2 sections, 3 to 12 pF, and 6 sections, 5 to 25 pF (13499) drawing no. 917-1128-00.	6-22
E401		SHIELD, ELECTRON TUBE: Short 7 pin (98738) part no. 26N205117.	6-22
E402		JACK, TIP: 1 female contact (98291) part no. SKT-1.	6-22
H401		WASHER, LOCK: No. 8 split (80063) SM-B-283201.	6-22
11402 through H408		Not used.	
H409		RING, RETAINING: 1/4 in.	6-22
HR401-A		ELEMENT, HEATING:	6-24
HR401-B		OVEN, CRYSTAL: (80063) drawing no. SM-C-249045.	6-24
J401 through J409		Not used.	
J410		CONNECTOR, RECEPTACLE, ELECTRICAL: 7 male contacts; (02660) part no. 26-191.	6-22
J411 through J413		Not used.	
J415		CONNECTOR, RECEPTACLE, ELECTRICAL: 1 male contact; (30684) part no. 46025.	6-22
J416		JACK, TIP: 1 female contact; (98291) type no. SKT-1.	6-22
J417		Same as J416.	6-23
L401		COIL, RADIO FREQUENCY: 500 uH; (95265) part no. C0047109.	6-23
L402		COIL, RADIO FREQUENCY: 10 uH at 7.9 MHz; (82142) part no. 10 102-32.	6-23
L403		COIL, TUNED CIRCUIT: Part of T401, listed for reference only.	6-22

Parts List: Part 3 - Crystal Oscillator Sub-Chassis			
REF DESIG	NOTES	NAME AND DESCRIPTION	FIG. NO.
L404		Same as L403.	6-22
P416		PLUG, TIP: 1 male contact; (98291) type no. FT-M-9.	6-24
P417		Same as P416.	6-24
R404		RESISTOR, FIXED, COMPOSITION: 27 ohm, ± 10%, 1/2 W, MIL type RC2OGF27OK.	6-23
R405		RESISTOR, FIXED, COMPOSITION: 33, 000 ohm, ± 10%, 1/2 W, MIL type RC2OGF33K.	6-23
R406		RESISTOR, FIXED, COMPOSITION: 3900 ohm, ± 10%, 1/2 W, MIL type RC2OGF392K.	6-23
R407		Same as R406.	6-23
S401		SWITCH SECTION, ROTARY: 1 moving contact, 32 fixed, 1 pole; (13499) drawing no. 269-1489-00.	6-23
S402		Same as S401.	6-23
S403		SWITCH, THERMOSTATIC: SPST; 115 Vac, 2.5 A; 28 Vdc, 2 A; (73168) type no. 32000-1.	6-24
T401		TRANSFORMER, RADIO FREQUENCY: 11.0 to 34.0 MHz frequency range of L403 and L404; (13499) drawing no. 278-0234-00. (Attaching Parts) NUT, HEX: Steel, 4-40 thread - 2 required. WASHER, LOCK: No. 4 - 2 required.	6-22
V401		ELECTRON TUBE: MIL type 5654/6AK5W.	6-22
XHR401-1		HOLDER, CRYSTAL UNIT:	6-22
XV401		SOCKET, ELECTRON TUBE: JAN type TS1O2PO1. (Attaching Parts) SCREW, MACHINE: Pan head, recessed drive, steel, 4-40 thread x 7/32 in. 1- 2 required. NUT, HEX: Steel, 4-40 thread - 2 required. WASHER, LOCK: No. 4 - 2 required.	6-23
Y401		CRYSTAL UNIT, QUARTZ: 10,000 kHz; MIL type CR-36/U.	6-22
Y402		CRYSTAL UNIT, QUARTZ: 10,500 kHz; MIL type CR-36/U.	6-22
Y403		CRYSTAL UNIT, QUARTZ: 11,000 kHz; MIL type CR-36/U.	6-22
Y404		CRYSTAL UNIT, QUARTZ: 11,500 kHz; MIL type CR-36/U.	6-22

Parts List: Part 3 - Crystal Oscillator Sub-Chassis			
REF DESIG	NOTES	NAME AND DESCRIPTION	FIG. NO.
Y405		CRYSTAL UNIT, QUARTZ: 12,000 kHz; MIL type CR-36/U.	6-22
Y406		CRYSTAL UNIT, QUARTZ: 12,500 kHz; MIL type CR-36/U.	6-22
Y407		CRYSTAL UNIT, QUARTZ: 13,000 kHz; MIL type CR-36/U.	6-22
Y408		CRYSTAL UNIT, QUARTZ: 8000 kHz; MIL type CR-36/U.	6-22
Y409		CRYSTAL UNIT, QUARTZ: 14,000 kHz; MIL type CR-36/U.	6-22
Y410		CRYSTAL UNIT, QUARTZ: 15,000 kHz; MIL type CR-36/U.	6-22
Y411		CRYSTAL UNIT, QUARTZ: 16,000 kHz; MIL type CR-36/U.	6-22
Y412		CRYSTAL UNIT, QUARTZ: 17,000 kHz; MIL type CR-36/U.	6-22
Y413		CRYSTAL UNIT, QUARTZ: 9500 kHz; MIL type CR-36/U.	6-22
Y414		CRYSTAL UNIT, QUARTZ: 14,500 kHz; MIL type CR-36/U.	6-22
Y415		CRYSTAL UNIT, QUARTZ: 15,500 kHz; MIL type CR-36/U.	6-22

Parts List: Part 4 - IF Amplifier Sub-Chassis			
REF DESIG	NOTES	NAME AND DESCRIPTION	FIG. NO.
C501		Same as C226.	6-18
C502		Same as C226.	6-18
C503		Same as C215.	6-18
C504		Same as C256.	6-18
C505		Same as C256.	6-18
C506		Same as C226.	6-18
C507	1	CAPACITOR, FIXED, MICA DIELECTRIC: 110 pF, ± 2%, 500 Vdcw; MIL type CM15D111G.	6-18
C508	1	Same as C507.	6-18
C509	1	Same as C507.	6-18
C510	1	Same as C507.	6-18
C511	1	Same as C226.	6-18
C512		Same as C226.	6-16
C513	1	Same as C507.	6-16
C514	1	Same as C507.	6-16
C515	1	Same as C507.	6-16
C516	1	Same as C507.	6-16
C517		Same as C256.	6-17
C518		Same as C226.	6-17
C519		Same as C226.	6-17
C520		CAPACITOR, VARIABLE: 3 to 12 pF, part of Z501, listed for reference only.	6-16
C521		Same as C256.	6-17
C522		Same as C226.	6-17
C523		Same as C226.	6-17

Parts List: Part 4 - IF Amplifier Sub-Chassis			
REF DESIG	NOTES	NAME AND DESCRIPTION	FIG. NO.
C524		CAPACITOR, FIXED: 75 pF, part of Z501, listed for reference only.	6-16
C525		CAPACITOR, VARIABLE, CERAMIC DIELECTRIC: 1.5 pF min, 7 to 10.5 pF max, 350 Vdcw; (72982) part no. 557.	6-17
C526		Same as C215.	6-17
C527		Same as C219.	6-17
C528		Same as C256.	6-17
C529		Same as C275.	6-17
C530		Same as C312.	6-17
C531		Same as C256.	6-18
C532		Same as C215.	6-18
C533		Same as C275.	6-18
C534		Same as C275.	6-17
C535		Same as C220.	6-17
C536		CAPACITOR, FIXED, PAPER DIELECTRIC: 0.1 uF, ± 20%, 100 Vdcw; (56289) part no. 96P10401S4.	6-18
C537		Same as C234-1.	6-18
C538		Same as C256.	6-17
C539		Same as C311.	6-18
C540		Same as C226.	6-18
C541		Same as C275.	6-18
C542		Same as C246-1.	6-18
C543		Same as C256.	6-18
C544		Same as C226.	6-18
C545		Same as C275.	6-18
C546		Same as C313.	6-18
C547		Same as C256.	6-18

Parts List: Part 4 - IF Amplifier Sub-Chassis			
REF DESIG	NOTES	NAME AND DESCRIPTION	FIG. NO.
C548		Same as C256.	6-18
C549		CAPACITOR, FIXED, PAPER DIELECTRIC: 10,000 pF, ± 20%, 300 Vdcw (56289) part no. 96P1030354.	6-18
C551		CAPACITOR, FIXED, PAPER DIELECTRIC: 2 uF, ± 10%, 500 Vdcw (53021) type no. 62A.	6-18
C552		Same as C226.	6-17
C553		Same as C549.	
C554		CAPACITOR, FIXED, MICA DIELECTRIC: 1600 pF, ± 1%, 100 Vdcw; part of Z502, listed for reference only.	6-17
C555		CAPACITOR, FIXED: 50 pF, part of Z502, listed for reference only.	6-17
C556		CAPACITOR, FIXED: 50 pF, part of Z502, listed for reference only.	6-17
C557		CAPACITOR, FIXED: Part of T501, listed for reference only.	6-16
C558		CAPACITOR, FIXED: Part of T501, listed for reference only.	6-16
C559		CAPACITOR, FIXED: Part of T502, listed for reference only.	6-16
C560		CAPACITOR, FIXED: Part of T502, listed for reference only.	6-16
C561		CAPACITOR, FIXED: Part of T503, listed for reference only.	6-16
C562		CAPACITOR, FIXED: Part of T503, listed for reference only.	6-16
C563		CAPACITOR, FIXED: Part of Z503, listed for reference only.	6-16
C564	1	CAPACITOR, VARIABLE, CERAMIC DIELECTRIC: 8 to 50 pF, 350 Vdcw.	6-18
C565	1	Same as C564.	6-18
C566	1	Same as C564.	6-18
C567	1	Same as C564.	6-18
C568	1	CAPACITOR, VARIABLE, CERAMIC DIELECTRIC: 8 to 50 pF, 350 Vdcw.	6-16
C569	1	Same as C568.	6-16
C570	1	Same as C568.	6-16

Parts List: Part 4 - IF Amplifier Sub-Chassis			
REF DESIG	NOTES	NAME AND DESCRIPTION	FIG. NO.
C571	1	Same as C568.	6-16
E501		SHIELD, ELECTRON TUBE: Medium 7 pin: (98738) part no. CWS26P202262, part no. 99X.	6-16
E502		Same as E501.	6-16
E503		Same as E501.	6-16
E504		Same as E501.	6-16
E505		Same as E501.	6-16
E506		SHIELD, ELECTRON TTJBE: Medium 9 pin: (98738) part no. 26N205116.	6-16
E507		Same as E506.	6-16
E508		Same as E501.	6-16
E509		Same as E506.	6-16
E510		SHIELD, ELECTRON TUBE: Long 9 pin: (98738) part no. 26N205115.	6-16
E511 through E521		Not used.	
E522		CORE, ADJUSTABLE TUNING: (92054) part no. 50-581; (13499) drawing no. 288-1092-00.	
FL502		FILTER, BANDPASS: 455 kHz center frequency ± 1 kHz bandwidth; (13499) drawing no. 522-9163-002. (Attaching Parts) SCREW, MACHINE: Pan head, recessed drive, steel, 4-40 thread x 7/32 in. 1-2 required. NUT, HEX: Steel, 4-40 thread - 2 required. WASHER, LOCK: No. 4 - 2 required.	6-18

Parts List: Part 4 - IF Amplifier Sub-Chassis			
REF DESIG	**NOTES**	**NAME AND DESCRIPTION**	**FIG. NO.**
FL503		FILTER, BANDPASS: 455 kHz center frequency ± 2 kHz bandwidth; (13499) drawing no. 522- 9160-002. (Attaching Parts) SCREW, MACHINE: Pan head, recessed drive, steel, 4-40 thread x 7/32 in. 1-2 required. NUT, HEX: Steel, 4-40 thread - 2 required. WASHER, LOCK: No. 4 - 2 required.	6-18
FL504		FILTER, MECHANICAL BANDPASS: 455 kHz center frequency ± 4 kHz bandwidth; (13499) drawing no. 522-9161-002. (Attaching Parts) SCREW, MACHINE: Pan head, recessed drive, steel, 4-40 thread x 7/32 in. 1-2 required. NUT, HEX: Steel, 4-40 thread - 2 required. WASHER, LOCK: No. 4 - 2 required.	6-18
FL505		FILTER, MECHANICAL BANDPASS: 455 kHz center frequency ± 8 kHz bandwidth; (13499) drawing no. 522-9162-002. (Attaching Parts) SCREW, MACHINE: Pan head, recessed drive, steel; 4-40 thread x 7/32 in. 1-2 required. NUT, HEX: Steel, 4-40 thread - 2 required. WASHER, LOCK: No. 4 - 2 required.	6-18
H501 through H515		Not used.	
H516		RING, RETAINING (89462) part no. 5101-25-C.	6-17
H517		RING, RETAINING:	6-17
H543		SLEEVE, SPRING: (13499) drawing no. 340064200.	6-17
J501 through J511		Not used.	

Parts List: Part 4 - IF Amplifier Sub-Chassis			
REF DESIG	NOTES	NAME AND DESCRIPTION	FIG. NO.
J512		CONNECTOR, RECEPTACLE, ELECTRICAL: 20 male contacts; (02660) type no. 26-806.	6-16
J513		CONNECTOR, RECEPTACLE, ELECTRICAL: 1 male contact; (30684) part no. 46025.	6-16
J514		Same as J513.	6-16
J515 through J517		Not used.	
J518		Same as J513.	6-16
L501		COIL, RADIO FREQUENCY: 500 uH; (95265) part no. C0047109.	6-18
L502		COIL, RADIO FREQUENCY: 12 uH (88063) type no. MPF.	6-17
L503		COIL, TUNED CIRCUIT: Part of Z501, listed for reference only.	6-18
L504		COIL, RADIO FREQUENCY: 130 uH; (13499) drawing no. 240-0491-00.	6-18
L505		Same as L502.	6-18
L506		COIL, TUNED CIRCUIT: Part of T501, listed for reference only.	6-16
L507		Same as L506.	6-16
L508		COIL, TUNED CIRCUIT: Part of Z502, listed for reference only.	6-17
L509		Same as L508.	6-17
L510		COIL, TUNED CIRCUIT: Part of T502, listed for reference only.	6-16
L511		Same as L510.	6-16
L512		COIL, TUNED CIRCUIT: Part of T503, listed for reference only.	6-16
L513		Same as L512.	6-16
L514		COIL, TUNED CIRCUIT: Part of Z503, listed for reference only.	6-16
0501		DETENT, SWITCH: (80063) drawing no. SM-B-249227.	6-17
0502		COUPLING, SHAFT, FLEXIBLE: (78493) part no. D64624.	6-17

Parts List: Part 4 - IF Amplifier Sub-Chassis			
REF DESIG	NOTES	NAME AND DESCRIPTION	FIG. NO.
0503 Through0 506		Not used.	
0507		SHAFT:	6-17
0508 Through0 549		Not used.	
0550		CLAMP; SHAFT	6-14
0551		Same as 0550.	6-14
R501		RESISTOR, FIXED, COMPOSITION: 22,000 ohm, ± 10%, ½ W, MIL type RC20GF223K.	6-18
R502	4	RESISTOR, FIXED, COMPOSITION: 33,000 ohm, ± 10%, ½ W, MIL type RC20GF333K.	6-18
R502-A	4	RESISTOR, FIXED, COMPOSITION: 39,000 ohm, ± 10%, ½ W, MIL type RC20GF393K. Alternate for R502. See note 1, Fig 6-18.	6-18
R502-B	4	RESISTOR, FIXED, COMPOSITION: 47,000 ohm, ± 10%, ½ W, MIL type RC20GF473K. Alternate for R502. See note 1, Fig 6-18.	6-18
R502-C	4	RESISTOR, FIXED, COMPOSITION: 56,000 ohm, ± 10%, ½ W, MIL type RC20GF563K. Alternate for R502. See note 1, Fig 6-18.	6-18
R502-D	4	RESISTOR, FIXED, COMPOSITION: 68,000 ohm, ± 10%, ½ W, MIL type RC20GF683K. Alternate for R502. See note 1, Fig 6-18.	6-18
R503	4	RESISTOR, FIXED, COMPOSITION: 560 ohm, ± 10%, ½ W, MIL type RC20GF561K.	6-18
R503-A	4	RESISTOR, FIXED, COMPOSITION: 1200 ohm, ± 10%, ½ W, MIL type RC20GF122K. Alternate for R503. See note 1, Fig 6-18.	6-18
R503-B	4	RESISTOR, FIXED, COMPOSITION: 1800 ohm, ± 10%, ½ W, MIL type RC20GF182K. Alternate for R503. See note 1, Fig 6-18.	6-18
R503-C	4	RESISTOR, FIXED, COMPOSITION: 2200 ohm, ± 10%, ½ W, MIL type RC20GF222K. Alternate for R503. See note 1, Fig 6-18.	6-18

Parts List: Part 4 - IF Amplifier Sub-Chassis			
REF DESIG	NOTES	NAME AND DESCRIPTION	FIG. NO.
R503-D	4	RESISTOR, FIXED, COMPOSITION: 2700 ohm, ± 10%, ½ W, MIL type RC20GF272K. Alternate for R503. See note 1, Fig 6-18.	6-18
R504		RESISTOR, FIXED, COMPOSITION: 1000 ohm, ± 10%, ½ W, MIL type RC20GF102K.	6-18
R505		RESISTOR, FIXED, COMPOSITION: 27,000 ohm, ± 10%, 1 W, MIL type RC32GF273K.	6-18
R506		RESISTOR, FIXED, COMPOSITION: 22,000 ohm, ± 10%, 2 W, MIL type RC42GF223K.	6-18
R507		Same as R501.	6-17
R508		RESISTOR, FIXED, COMPOSITION: 2200 ohm, ± 10%, ½ W, MIL type RC20GF222K.	6-18
R509 and R510		Not used.	
R511		Part of T501, listed for reference only.	6-16
R512		Same as R511.	6-16
R513		RESISTOR, FIXED, COMPOSITION: 100 ohm, ± 10%, ½ W, MIL type RC20GF101K.	6-17
R514		RESISTOR, FIXED, COMPOSITION: 82,000 ohm, ± 10%, ½ W, MIL type RC20GF823K.	6-17
R515		RESISTOR, FIXED, COMPOSITION: 27,000 ohm, ± 10%, ½ W, MIL type RC20GF273K.	6-17
R516		Same as R501.	6-17
R517		Not used.	
R518		Same as R513.	6-17
R519		RESISTOR, VARIABLE: 10,000 ohm, ± 20%, 1 W, MIL type RV2LAXSA103B.	6-16
R520		Same as R515.	6-17
R521		Same as R508.	6-17

Parts List: Part 4 - IF Amplifier Sub-Chassis			
REF DESIG	NOTES	NAME AND DESCRIPTION	FIG. NO.
R522		Part of T503, listed for reference only.	6-16
R523		RESISTOR, VARIABLE: 100 ohm, ± 20%, 1 W, MIL type RV2LAXSA101B.	6-16
R524		RESISTOR, FIXED, COMPOSITION: 680 ohm, ± 10%, ½ W, MIL type RC20GF681K.	6-17
R525		RESISTOR, FIXED, COMPOSITION: 2200 ohm, ± 10%, 1 W, MIL type RC32GF222K.	6-17
R526		Same as R515.	6-18
R527		Same as R515.	6-18
R528		RESISTOR, FIXED, COMPOSITION: 150,000 ohm, ± 10%, ½ W, MIL type RC20GF154K.	6-17
R529		RESISTOR, FIXED, COMPOSITION: 33, 000 ohm, ± 10%, ½ W, NIL type RC20GF333K.	6-17
R530		RESISTOR, FIXED, COMPOSITION: 22,000 ohm, ± 10%, 1 W, MIL type RC32GF223K.	6-17
R531		Same as R521.	6-17
R532		RESISTOR, FIXED, COMPOSITION: 470,000 ohm, ± 10%, ½ W, MIL type RC20GF474K.	6-18
R533		RESISTOR, FIXED, COMPOSITION: 820,000 ohm, ± 10%, ½ W, MIL type RC20GF824K.	6-18
R534		RESISTOR, FIXED, COMPOSITION: 390,000 ohm, ± 10%, ½ W, MIL type RC20GF394K.	6-18
R535		Same as R532.	6-18
R536		RESISTOR, FIXED, WIRE WOUND: 4 ohm, ± 5%, 8 W, MIL type RW30G4R0.	6-18
R537		RESISTOR, FIXED, COMPOSITION: 22 ohm, ± 10%, 1 W, MIL type RC32GF220K.	6-16
R538		RESISTOR, FIXED, COMPOSITION: 390 ohm, ± 10%, ½ W, MIL type RC20GF391K.	6-18

Parts List: Part 4 - IF Amplifier Sub-Chassis			
REF DESIG	NOTES	NAME AND DESCRIPTION	FIG. NO.
R539		Same as R504.	6-18
R540		RESISTOR, FIXED, COMPOSITION: 1 meg, ± 10%, ½ W, MIL type RC20GF105K.	6-18
R541		RESISTOR, FIXED, COMPOSITION: 270 ohm, ± 10%, ½ W, MIL type RC20GF271K.	6-18
R542		Same as R521.	6-18
R543		Same as R502-B.	6-18
R544		RESISTOR, FIXED, COMPOSITION: 2.7 meg, ± 10%, ½ W, MIL type RC20GF275K.	6-17
R545		RESISTOR, FIXED, COMPOSITION: 100,000 ohm, ± 10%, ½ W, MIL type RC20GF104K.	6-18
R546		RESISTOR, FIXED, COMPOSITION: 180,000 ohm, ± 10%, ½ W, MIL type RC20GF184K.	6-18
R547		RESISTOR, FIXED, COMPOSITION: 220,000 ohm, ± 10%, ½ W, MIL type RC20GF224K.	6-17
R548		RESISTOR, FIXED, COMPOSITION: 27 ohm, ± 10%, ½ W, MIL type RC20GF270K.	6-17
R549		RESISTOR, FIXED, COMPOSITION: 82,000 ohm, ± 10%, 1 W, MIL type RC32GF823K.	6-17
R550		Same as R514.	6-17
R551		Same as R521.	6-17
R552		Same as R548.	6-18
R553		Part of T502, listed for reference only.	6-16
R554		Same as R553.	6-16
RT510		RESISTOR, CURRENT REGULATOR: 0.310 A, 8.6 Vac, (70563) ballast 3TF7.	6-16
S501		SWITCH SECTION, ROTARY: 1 moving contact, 7 fixed, 1 pole; (13499) drawing no. 269-1769-00.	6-18

Parts List: Part 4 - IF Amplifier Sub-Chassis			
REF DESIG	**NOTES**	**NAME AND DESCRIPTION**	**FIG. NO.**
S502		SWITCH SECTION, ROTARY: 2 moving contacts, 17 fixed, 2 poles; (13499) drawing no. 268-1770-00.	6-18
S503		Same as S502.	6-17
T501		TRANSFORMER, INTERMEDIATE FREQUENCY: 455 kHz center frequency, consisting of L506, L507, R511, R512, C557, and C558, (13499) drawing no. 278-0236-00. (Attaching Parts) NUT, HEX: Steel, 4-40 thread - 2 required. WASHER, LOCK: No. 4 - 2 required.	6-16
T502		Same as T501, consisting of L510, L511, R553, L554, C559, and C560.	6-16
T503		TRANSFORMER, INTERMEDIATE FREQUENCY: 455 kHz center frequency, consisting of L512, L513, R522, C561, and C562; (13499) drawing no.278-0237-00. (Attaching Parts) NUT, HEX: Steel, 4-40 thread - 2 required. WASHER, LOCK: No. 4 - 2 required.	6-16
TB501		TERMINAL PHENOLIC: 10 turret terminal component mounting board, IF subassembly (80063) drawing no. SM-B-249000.	6-18
TB502		TERMINAL PHENOLIC: 10 turret terminal, component mounting board, IF subassembly (80063) drawing no. SM-B-249003.	6-18
V501		ELECTRON TUBE: MIL type 5749/6BA6W.	6-16
V502		Same as V501.	6-16
V503		Same as V501.	6-16
V504		ELECTRON TUBE: MIL type 6AK6.	6-16
V505		Same as V501.	6-16
V506		ELECTRON TUBE: MIL type 5814A.	6-16

Parts List: Part 4 - IF Amplifier Sub-Chassis			
REF DESIG	NOTES	NAME AND DESCRIPTION	FIG. NO.
V507		Same as V506.	6-16
V508		Same as V501.	6-16
V509		Same as V506.	6-16
XRT510		SOCKET, ELECTRON TUBE: JAN type TS103P01. (Attaching Parts) SCREW, MACHINE: Pan head, recessed drive, steel, 4-40 thread x 7/32 in. 1-2 required. NUT, HEX: Steel, 4-40 thread - 2 required. WASHER, LOCK: No. 4 - 2 required.	6-17
XV501		SOCKET, ELECTRON TUBE: JAN type TS102P01 (Attaching Parts) SCREW, MACHINE: Pan head, recessed drive, steel, 4-40 thread x 7/32 in. 1-2 required. NUT, HEX: Steel, 4-40 thread - 2 required. WASHER, LOCK. No. 4 - 2 required.	6-18
XV502		Same as XV501.	6-17
XV503		Same as XV501.	6-17
XV504		Same as XV501.	6-17
XV505		Same as XV501.	6-17
XV506		SOCKET, ELECTRON TUBE: JAN type TS103P01. (Attaching Parts) SCREW, MACHINE: Pan head, recessed drive, steel, 4-40 thread x 7/32 in. 1-2 required. NUT, HEX: Steel, 4-40 thread – 2 required. WASHER, LOCK: No. 4 - 2 required.	6-17
XV507		Same as XV506.	6-18
XV508		Same as XV501.	6-18

Parts List: Part 4 - IF Amplifier Sub-Chassis			
REF DESIG	**NOTES**	**NAME AND DESCRIPTION**	**FIG. NO.**
XV509		Same as XV506.	6-18
Y501		CRYSTAL UNIT, QUARTZ: 455 kHz, MIL type CR-45/U. Part of Z501.	6-16
Z501		FILTER, BANDPASS: 455 kHz peak frequency, including L503, C520, C524, and Y501. (Attaching Parts) NUT, HEX: Steel, 4-40 thread - 2 required. WASHER, LOCK: No. 4 - 2 required.	6-16
Z502		OSCILLATOR, RADIO FREQUENCY: 452 kHz to 458 kHz frequency range; including L508, L509, C554, C555, and C556. (13499) drawing no. 522-0196-004. (Attaching Parts) NUT, HEX: Steel, 4-40 thread - 2 required. WASHER, LOCK: No. 4 - 2 required.	6-17
Z503		TUNED CIRCUIT, INTERMEDIATE FREQUENCY: 455 kHz center frequency; Including L514 and C563, (13499) drawing no. 278-0235-00. (Attaching Parts) NUT, HEX: Steel, 4-40 thread - 2 required. WASHER, LOCK: No. 4 - 2 required.	6-16

Parts List: Part 5 - AF Amplifier Sub-Chassis			
REF DESIG	NOTES	NAME AND DESCRIPTION	FIG. NO.
C601		Same as C549.	6-28
C602		Same as C275.	6-28
C603		CAPACITOR, FIXED, ELECTROLYTIC: 3 section, 30 uF, 300 Vdcw, MIL type CE53C300N. (Attaching Parts) SPACER: Anodized al, hex rod, 1/4 in. x 1-3/4 in. 1, drilled and tapped 3/8 in. for 6-32 screw - 1 required. CLAMP, LOOP: 1/2 in. steel strap, w/holddown tab - 1 required. NUT, HEX: Self locking, steel, 6-32 thread 1 required. SCREW, MACHINE: Filister head, recessed drive, 6-32 thread x 3/8 in. 1 - 2 required. SCREW, MACHINE: Pan head, recessed drive, 6-32 thread x 13/36 In. 1 -1 required. WASHER, LOCK: No. 6 - 2 required. WASHER, FLAT: No. 6 - 2 required.	6-27
C604		Same as C549.	6-28
C605		Same as C549.	6-28
C606		CAPACITOR, FIXED, ELECTROLYTIC: 2 sections, 45 uF, 300 Vdcw, MIL type CE52C450N. (Attaching Parts) SPACER: Anodized al, hex rod, 1/4 in. x 1-3/4 in. 1, drilled and tapped 3/8 in. for 6-32 screw - 1 required. CLAMP, LOOP: 1/2 in. steel strap, w/holddown tab - 1 required. SCREW, MACHINE: Pan head, recessed drive, steel, 6-32 thread x 13/36 in. 1 - 1 required.	6-27
		NUT, HEX: Self locking, steel, 6-32 thread - 1 required.	
		SCREW, MACHINE: Filister head, steel, 6-32 thread x 3/8 in. I - 2 required	
		WASHER, LOCK; No. 6 - 2 required.	
		WASHER, FLAT: No. 6 - 2 required.	
C607		Same as C549.	6-28
C608		Same as C549.	6-28

C609		CAPACITOR, FIXED, ELECTROLYTIC: 8 µF, 30 Vdcw, (21520) type no. PP8B30A2.	6-28
C611		Same as C226.	6-28
C612		Same as C240-1.	6-28
E601		SHIELD, ELECTRON TUBE: Medium 9 pin.	6-27
E602		Same as E601.	6-27
E603		SHIELD, ELECTRON TUBE: Medium 7 pin.	6-27
E604		Same as E603.	6-27
E605		SHIELD, ELECTRON TUBE: Long 7 pin.	6-27
E607		JACK, TIP: 1 female contact.	6-27
FL6O1		FILTER, BANDPASS: 800 Hz center frequency, ± 100 Hz bandwidth (13499) drawing no. 673-0348-00. (Attaching Parts) NUT, HEX: Steel, 6-32 thread - 4 required. WASHER, LOCK: No. 6 - 4 required. WASHER, FLAT: No. 6 - 4 required.	6-27
H611		SLEEVE, SPRING: For No. 8 captive screw (80063) drawing no. SM-B-283175.	6-28
J601 Through J618		Not used.	
J619		INSERT, CONNECTOR, ELECTRICAL: 11 male contacts; (02660) part no. 26-804. (Attaching Parts) SCREW, MACHINE: Pan head, recessed drive, steel, 4-40 thread x 5/8 in. 1 -2 required. NUT, HEX: Steel, 4-40 thread 2 required.	6-27

J620		CONNECTOR, PLUG, ELECTRICAL; 15 male contacts; (02660) part no. 26-151. (Attaching Parts) SCREW, MACHINE: Pan head, recessed drive, steel, 4-40 thread x 5/8 in. I -2 required. NUT, HEX: Steel, 4-40 thread - 2 required.	6-27
K601		RELAY, BREAK-IN: 25 Vac, 1.0 A; Robbins and Meyers type no. HL-SA-RF; per SM-C-283244. (Attaching Parts) NUT, HEX: Steel, 6-32 thread - 3 required. WASHER, LOCK: No. 6 - 3 required.	6-27
L601		COIL, REACTOR: 2.5 H at 50 V rms, 60 Hz, 200 mA, 137 ohm at 25° C; (73386) type no. 25701. (Attaching Parts) NUT, HEX: Steel, 6-32 thread - 4 required. WASHER, LOCK: No. 6 - 4 required. WASHER, FLAT: Steel, no. 6 - 4 required.	6-27
L602		COIL, REACTOR: 6.0 H at 10 V rms, 60 Hz, 150 mA, 137 ohm at 25°C; (73386) type no. 25700. (Attaching Parts) NUT, HEX: Steel, 6-32 thread - 4 required. WASHER, LOCK: No. 6 - 4 required. WASHER, FLAT: Steel, no. 6 - 4 required.	6-27
L603		COIL, REACTOR: 4.0 H at 10 V rms, 60 Hz, 50 mA, 110 ohm at 25°C; (98738) type no. 24N205209. (Attaching Parts) NUT, HEX: Steel, 6-32 thread - 4 required. WASHER, LOCK: No. 6 - 4 required. WASHER, FLAT: Steel, no, 6 - 4 required.	6-27
R601		RESISTOR, FIXED, COMPOSITION: 680,000 ohm, ± 10%, 1/2W, MIL type RC20GF684K.	6-28
R602		RESISTOR, FIXED, COMPOSITION: 2.7 meg, ± 10%, 1/2 W, MIL type RC20GF275K.	6-28
R603		Same as R601.	6-28
R604		RESISTOR, FIXED, COMPOSITION: 1200 ohms, ± 10%, 1/2 W, MIL type RC20GF122K.	6-28

R605		RESISTOR, FIXED, COMPOSITION: 56, 000 ohms, ± 10%, 1 W, MIL type RC32GF563K.	6-28
R606		RESISTOR, FIXED, COMPOSITION: 2200 ohm, ± 10%, 1 W, MIL type RC32GF222K.	6-28
R607		RESISTOR, FIXED, COMPOSITION: 470,000 ohms, ± 10%, 1/2W, MIL type RC20GF474K.	6-28
R608		Same as R607.	6-28
R609		Same as R607.	6-28
R610		RESISTOR, FIXED, COMPOSITION: 680 ohms, ± 10%, 1/2 W, M1L type RC20GF681K.	6-28
R611		RESISTOR, FIXED, COMPOSITION: 180,000 ohm, ± 10%, 1 W, MI type RC32GF184K.	6-28
R612		RESISTOR, FIXED, COMPOSITION: 220,000 ohm, ± 10%, 1 W, MIL type RC32GF224K.	6-28
R613		Same as R607.	6-28
R614		RESISTOR, FIXED, COMPOSITION: 560 ohms, ± 10%, 1 W, MIL type RC32GF561K.	6-28
R615		RESISTOR, FIXED, COMPOSITION: 56 ohm, ± 10%, 1/2 W, MIL type RC20GF560K.	6-28
R617		RESISTOR, FIXED, WIRE WOUND: 1600 ohm, ± 5%, 10 W, MIL type RW31G162. (Attaching Parts) SPACER, FEEDTHROUGH: Al, anodized, 3/16 in. dia x 1-1/2 in. 1, w/machined collar 1 end, 1/4 in. dia x 3/32 in., drilled and tapped each end 3/8 in. for a 6-32 screw - 1 required. SCREW, MACHINE: Pan head, recessed drive, steel, 6-32 thread x 3/8 in. 1 -2 required. WASHER, LOCK: No. 6 - 1 required. WASHER, FLAT: Steel, 1/2 in. od, 3/16 in. id - 1 required. WASHER, FLAT: Steel, 3/8 in. od, 3/32 in. Id - 1 required. WASHER, INSULATING: Mica, 1/32 in. thick, 1/2 in. od, 3/16 in. id -1 required. WASHER, INSULATING: Mica, 1/32 in. thick, 3/8 in. od, 3/16 in. id - required.	6-28

R618		RESISTOR, FIXED, WIRE WOUND: 1200 ohm, ± 5%, 10 W, MIL type RW31G122. (Attaching Parts) SPACER, FEEDTHROUGH: Al, anodized, 3/16 in. dia x 1-1/2 in. l, w/machined collar 1 end, 1/4 in. dia x 3/32 in., drilled and tapped each end 3/8 in. for 6-32 screw - 1 required. SCREW, MACHINE: Pan head, recessed drive, steel, 6-32 thread x 3/8 in.1 1 required, WASHER, LOCK: No. 6 - 1 required. WASHER, FLAT: Steel, 1/2 in. od, 3/16 in. id - 1 required. WASHER, FLAT: Steel, 3/8 in. od, 3/32 in. id - 1 required. WASHER, INSULATING: Mica, 1/32 in. thick, 1/2 in. od, 3/16 in. id -1 required. WASHER, INSULATING: Mica, 1/32 in. thick, 3/8 in. od, 3/16 in. id -1 required.	6-28
R619		RESISTOR, FIXED, WIRE WOUND: 800 ohm, ± 5%, 8 W, MIL type RW30G80 1. (Attaching Parts) SPACER, FEEDTHROUGH: Al, anodized, 3/16 in. dia x 1 in. l, w/machined collar 1 end, 1/4 in. dia x 3/32 in. drilled and tapped each end 5/16 in. for 4-40 screw - 1 required. (Attaching Parts) SCREW, MACHINE: Pan head, recessed drive, steel, 4-40 thread x 3/8 in. l - 2 required. WASHER, FLAT: Steel, 1/2 in. od, 3/16 in. id - 1 required. WASHER, FLAT: Steel, 3/8 in. od, 3/32 in. id 1 required. WASHER, INSULATING: Mica, 1/32 in. thick, 1/2 in. od, 3/16 in. id -1 required. WASHER, INSULATING: Mica, 1/32 in. thick, 3/8 in. od, 3/32 in. id -1 required. WASHER, LOCK: No. 4 - 1 required.	6-28
R620		Same as R607.	6-28
R621		Same as R610.	6-28
R622		Same as R611.	6-28
R623		RESISTOR, FIXED, COMPOSITION: 47 ohm, ± 10%, 1/2 W, MIL type RC20GF470J.	6-28
R624		Same as R607.	6-28
R625		Same as R614.	6-28
R626		RESISTOR, FIXED, COMPOSITION: 150,000 ohm, ± 10%, 1 W, MIL type RC32GF154K.	6-28
R627		RESISTOR, FIXED, COMPOSITION: 1000 ohm, ± 10%, 1/2 W, MIL type RC20GF102K.	6-28

T601		TRANSFORMER, AUDIO FREQUENCY: 10,000 ohm primary impedance, 600 ohm output impedance, 20 mA pri; Chicago Trans type no. CSTC 17594. (Attaching Parts) NUT, HEX: Steel, 4-40 thread - 2 required. WASHER, LOCK: No. 4 - 2 required.	6-27
T602		Same as T601.	6-27
TB601		TERMINAL PHENOLIC; 25 turret terminal, component mounting board, AF subassembly; (80063) SM-B-248987. (Attaching Parts) SPACER: Al, anodized, 1/4 in. hex x 5/8 in. l, drilled through and tapped each end for 6-32 screw - 2 required. SCREW, MACHINE: Pan head, recessed drive, steel, 6-32 thread x 5/32 in. l - 4 required. WASHER, LOCK: No. 6 - 4 required. WASHER, FLAT: Steel, no. 6 - 4 required.	6-28
V601		ELECTRON TUBE: MIL type 5814A.	6-27
V602		Same as V601.	6-27
V603		ELECTRON TUBE: MIL type 6AK6.	6-27
V604		Same as V603.	6-27
V605		ELECTRON TUBE: MIL type OA2WA.	6-27
XC601 and XC602		Not used.	
XC603		SOCKET, ELECTRON TUBE: JAN type TS101P01. (Attaching Parts) SCREW, MACHINE: Filister head, recessed drive, steel, 6-32 thread 13/32 in. l -2 required. NUT, HEX: Steel, 6-32 thread - 2 required. WASHER, LOCK: No. 6 - 2 required. SPACER: Al, anodized, 1/8 in. thick x 1/4 in. od, drilled for no. 6 screw - 2 required.	6-28
XC604 and XC605		Not used.	
XC606		Same as XC603.	6-28

XV601		SOCKET, ELECTRON TUBE: JAN type TS103P01. (Attaching Parts) SCREW, MACHINE: Pan head, recessed drive, steel, 4-40 thread x 7/32 in. l -2 required. NUT, HEX: Steel, 4-40 thread - 2 required. WASHER, LOCK: No. 4 - 2 required.	6-28
XV602		Same as XV601.	6-28
XV603		SOCKET, ELECTRON TUBE: JAN type TS102P01. (Attaching Parts) SCREW, MACHINE: Pan head, recessed drive, steel, 4-40 thread x 7/32 in. l -2 required. NUT, HEX: Steel, 4-40 thread - 2 required. WASHER, LOCK: No. 4 - 2 required.	6-28
XV604		Same as XV603.	6-28
XV605		Same as XV603.	6-28

Parts List: Part 6 - VFO Sub-Chassis			
REF DESIG	NOTES	NAME AND DESCRIPTION	FIG. NO.
C701		CAPACITOR, FIXED: 370 pF, ± 1%, 500 Vdcw (71590) type no. 951-001; part of HR701, listed for reference only.	6-25
C702		CAPACITOR, FIXED; 10 pF, part of HR7O1, listed for reference only.	6-25
C703		Same as C702.	6-25
C704		CAPACITOR, FIXED: 15 pF, ± 2%, 500 Vdcw, MIL type CC30CH150G, part of HR701, listed for reference only.	6-25
C705		CAPACITOR ASSEMBLY: Fixed, ceramic dielectric, 6 sections, consisting of C705, C707, C708, C712, C713, and C714, 5000 pF, ± 10%, 1000 Vdcw (04713) part no. 301B13995-1.	6-26
C706		CAPACITOR, VARIABLE, GLASS DIELECTRIC; 1.5 to 8 pF, Corning part no. 692063; (13499) drawing no. 922-0150-00. Part of Z702.	6-25
C707		Part of C705.	6-26
C708		Part of C705.	6-26
C709		CAPACITOR, FIXED, MICA DIELECTRIC: 510 pF, ± 2%, 300 Vdcw, MIL type CM15D511G. Part of Z702.	6-25
C710		Same as C226.	6-25
C711		Same as C226.	6-25
C712		Part of C705.	6-26
C713		Part of C705.	6-26
C714		Part of C705.	6-26
E701		SHIELD, ELECTRON TUBE: Medium 7 pin, (98738) part no. CWS26P202262, Type 99X.	6-25
H701		WASHER, LOCK: No. 8 split (80063) drawing no. SM-B-283201.	
HR701		OVEN, TUNED CIRCUIT: Including C701, C702, C704, L701, L702, and L705.	6-25
J701 through J708		Not used.	
J709		CONNECTOR, RECEPTACLE, ELECTRICAL: MIL type MS24056-1.	6-25
L701		COIL, TUNED CIRCUIT: Part of HR7O1, listed for reference only.	6-25

Parts List: Part 6 - VFO Sub-Chassis			
REF DESIG	NOTES	NAME AND DESCRIPTION	FIG. NO.
L702		Same as L701.	6-25
L703 and L 704		Not used.	
L705		REACTOR, RADIO FREQUENCY: 7.5 µH (13499) drawing no. 240-0098-00.	6-25
L706		COIL, RADIO FREQUENCY: 10 µH (82142) part no. 10102-32.	6-26
0701 through 0705		Not used.	
0706		COUPLING:	6-4
0707		COUPLER. OLDHAM: Used on VFO shaft.	6-15
0708		SPRING:	6-4
0709		CLIP, TUBE SHIELD RETAINER; (13499) drawing no. 506-4207-002	6-15 6-25
P717		CONNECTOR, PLUG, ELECTRICAL: 1 female contact, 90° angle; (30484) part no. 45400.	6-25 6-14
R701		RESISTOR, FIXED, COMPOSITION: 150, 000 ohm, ± 10%, 1/2 W, MIL type RC20GF154K.	6-26
R702	8	RESISTOR, FIXED, COMPOSITION: 56, 000 ohm, ± 10%, 1/2 W, MIL type RC20GF563K.	6-26
R703		RESISTOR, FIXED, COMPOSITION: 2200 ohm, ± 10%, 1/2 W, MIL type RC20GF222K.	6-26
R704		RESISTOR, FIXED, COMPOSITION: 150 ohm, ± 10%, 1/2 W, MIL type RC20GF151K. Part of Z702.	6-25
S701		SWITCH, THERMOSTATIC: 115 Vac, 10 A; 230 Vac, 5 A; (73168) part no. 17010; part of HR7O1, listed for reference only.	6-25
T701		TRANSFORMER, RADIO FREQUENCY: Pri: 173 µH, sec: 5.75 µH (90526) type no. P-191-A. Part of Z702.	6-25
V701		ELECTRON TUBE: MIL type 5749 / 6BA6W.	6-25
W701A		CABLE, RADIO FREQUENCY: RG-187/U.	6-26

Parts List: Part 6 - VFO Sub-Chassis			
REF DESIG	NOTES	NAME AND DESCRIPTION	FIG. NO.
XV701		SOCKET, ELECTRON TUBE: JAN type TS102P01. (Attaching Parts) SCREW, MACHINE: Pan head, recessed drive, steel, 4-40 thread x 7/32 in. l - 2 required. NUT, HEX: Steel, 4-40 thread - 2 required. WASHER, LOCK No. 4 - 2 required.	6-26
Z702		RF TUNED CIRCUIT: 2.4 to 3.5 MHz frequency range; consists of T701, C706, C709, and R704.	6-25

Parts List: Part 7 - Power Supply Sub-Chassis			
REF DESIG	NOTES	NAME AND DESCRIPTION	FIG. NO.
CR801	7	SEMI-CONDUCTOR DEVICE, DIODE: MIL type 1N561.	
CR802	7	Same as CR801.	
E801		SHIELD, ELECTRON TUBE: Medium 9 pin; (98738) part no. 26N205116.	6-29
E802		Same as E801.	6-29
J801 through J810		Not used.	
J811		INSERT, CONNECTOR ELECTRICAL: 11 male contacts; (02660) part no. 26-804.	6-29
T801		TRANSFORMER, POWER, STEP-UP AND STEP-DOWN: 115/230 volt, 48 to 62 Hz, 1 phase; Chicago Trans. type no. CSTC 20164.	6-29
TB801		TERMINAL BOARD: Power input. (Attaching Parts) SCREW, MACHINE: Pan head, recessed drive, steel, 4-40 thread x 5/8 in. 1 - 4 required. NUT, HEX; Steel, 4-40 thread - 4 required.	6-30
V801	7	ELECTRON TUBE: MIL type 26Z5W.	6-29
V802	7	Same as V801.	6-29
XV801		SOCKET, ELECTRON TUBE: JAN type TS103P01. (Attaching Parts) SCREW, MACHINE: Pan head, recessed drive, steel, 4-40 thread x 7/32 in. 1 - 2 required. NUT, HEX: Steel, 4-40 thread - 2 required. WASHER, LOCK: No. 4 - 2 required.	6-30
XV802		Same as XV801.	6-30

Parts List: Part 8 - Change Additions			
REF DESIG	NOTES	NAME AND DESCRIPTION	FIG. NO.
J901	5	CONNECTOR, ELECTRICAL: (06840) drawing no. AN3102A10SL4S. (Attaching Parts) SCREW, MACHINE: Pan head, slottedhead, steel, 4-40 thread x 1/4 in. l - 4 required. NUT, HEX: Steel, 4-40 thread - 4 required. WASHER, LOCK; No. 4 - 4 required.	6-38
J902	5	Same as J901.	6-38
J903	5	CONNECTOR, ELECTRICAL: (02660) drawing no. AN3102A16S5P. (Attaching Parts) SCREW, MACHINE: Pan head, slottedhead, steel, 4-40 thread x 1/4 in. l - 4 required. NUT, HEX: Steel, 4-40 thread - 4 required. WASHER, LOCK: No. 4 - 4 required.	6-38
J904	6	JACK, TIP, DIODE TEST: (08288) drawing no. MS5935-06.	6-32
J1001		CONNECTOR:	
P901	5	CONNECTOR: MIL type MS3108B-10SL-4S.	
P901-B	5	ADAPTER: (88044) drawing no. AN-3057-4B.	
P902	5	Same as P901.	
P902-B	5	Same as P901-B.	
P903	5	CONNECTOR: MIL type MS3108B-16S-5S.	
P903-B	5	CLAMP: (88044) drawing no. AN-3057-8	
P1001		CONNECTOR: (74868) drawing no. I1C83200.	
P1002		CONNECTOR, ELECTRICAL: (91146) drawing no. B2246-1.	
P1003		CONNECTOR: (81349) MIL type A27434-23.	
P1004		CONNECTOR: (96906) MIL type: MS35322-567A.	
P1005		ADAPTER: (96906) MIL type MS35315 REV B.	

7.4 LIST OF MANUFACTURERS

Table 7-3: LIST OF MANUFACTURERS

List of Manufacturers		
MFR CODE	**NAME**	**ADDRESS**
02660	Amphenol - Borg Electronics Corp.	Chicago, Ill.
04009	Arrow Hart & Hegeman Electric Co.	Hartford, Conn.
04713	Motorola, Inc.	Phoenix, Ariz.
06840	Bendix Corp.	Detroit, Michigan
08288	Military Supply Standard	
08806	General Electric	Cleveland, Ohio
13499	Collins Radio Company	Cedar Rapids, Iowa
21520	Fansteel	Chicago, Ill.
30684	Industrial Product Co.	Philadelphia, Pa.
53021	Sangamo	Springfield, Ill.
55026	Simpson Electric	Chicago, Ill.
56289	Sprague Electric Company	North Adams, Mass.
70563	Amperite Co.	Union City, N.J.
71450	C.T.S. Corp.	Elkhart, Ind.
71590	Centralab Div. of Globe-Union	Milwaukee, Wis.
71785	Cinch Mfg. Co. and Howard B. Jones Div.	Chicago, Ill.
72136	Electro Motive Mfg. Co.	Willimantic, Conn.
72982	Erie Technological Products	Erie, Pa.
73168	Fenwal	Ashland, Mass.
73386	Freed Transformer Co.	Brooklyn, N. Y.
74868	Amphenol Corp., Amphenol R. F. Div.	Danbury, Conn.
74970	E.F. Johnson	Waseca, Minn.
75378	CTS Knights Inc.	Sandwich, Ill.

List of Manufacturers		
MFR CODE	NAME	ADDRESS
75915	Littelfuse, Inc.	Des Planes, Ill.
76854	Oak Mfg. Co.	Crystal Lake, Ill.
80063	Signal Corps Eng.	Fort Monmouth, N. J.
81348	Federal Specification Promulgated by General Service Administration	
81349	Military Specifications Promulgated by Standardization Div. Directorate of Logistics Services DSA	
82104	Grigsby Allison Co., Inc.	Arlington Heights, Ill.
82142	Jeffers Electronics	DuBois, Pa.
82424	Knudsen	Chicago, Ill.
88044	Aeronautical Standard Group Dept of Navy and Air Force	
88063	Communication Accessories	Summit, Mo.
89462	Waldes Kohinoor Inc.	Cambridge, Mass.
90526	Clippard Inst. Lab Company	Cincinnati, Ohio
91146	ITT Cannon Electric Inc. , Salem Div.	Salem, Mass.
92054	Radio Cores Inc.	Lawn, Ill.
95265	National Coil	Sheridan, Wyo.
96906	Military Standards Promulgated by Standardization Div. Directorate of Logistics Services DSA	
98291	Sealectro Corp.	Mamaroneck, N.Y.
98738	Stewart-Warner Electronics	Chicago, Ill.

8. - Chapter 8 - Installation

TABLE OF CONTENTS

8. - CHAPTER 8 - INSTALLATION 8-1

8.1 UNPACKING 8-2
8.2 SITE INFORMATION 8-2
8.3 MATERIAL REQUIRED FOR INSTALLATION 8-5
8.4 INPUT REQUIREMENTS 8-5
8.5 INSTALLATION PROCEDURES 8-6
8.6 INSTALLATION CHECKOUT 8-9

FIGURES

Figure 8-1 - Packaging 8-3
Figure 8-2 - Outline and Dimensions 8-4
Figure 8-3 - Connections for 115-Volt or 230-Volt Operation 8-6
Figure 8-4 - Interconnecting Cabling 8-10

8.1 UNPACKING

8.1.1 Packaging Data. When packed *for* shipment, the components of the receiver are placed in a water-vapor-proof container and packed in a wooden box. An exploded view of the wooden box and its contents is shown in figure 8-1. The dimensions of the box are approximately 24-1/4 inches high, 20-1/2 inches wide, and 14-3/4 inches deep. The packed box weighs approximately 100 pounds, with a volume of 3.9 cubic feet.

8.1.2 Removing Contents. Select a location where the equipment may be unpacked without exposure to the weather, and which is convenient to the place of installation.

⇒ Caution:	Be careful when uncrating, unpacking, and handling the equipment, because it is easily damaged.

1. Place the packing case conveniently near the installation location.
2. Cut and fold back the metal straps.
3. Remove the nails with a nail puller.
4. Remove the top and one side of the wooden box.
5. Remove the desiccant bags, the cardboard tray, and the plywood board.
6. Take out the outer cardboard carton that contains the receiver.
7. Open the carton and withdraw the inner carton that is enclosed in the moisture-vapor-proof barrier.
8. Slit open the seams of the moisture-vapor-proof harrier and open the inner cardboard carton.
9. Remove any spacers or padding from the inner cardboard carton,
10. Withdraw the receiver from the inner carton and place It on a workbench near Its final location.
11. Remove the technical manuals and the running spares.

8.2 SITE INFORMATION

8.2.1 The receiver is designed for mounting in a standard 19-inch rack or cabinet. Refer to figure 8-2 for outline and mounting dimensions. The site location should be sufficiently weather-tight to protect the equipment. Allow enough room for free air.

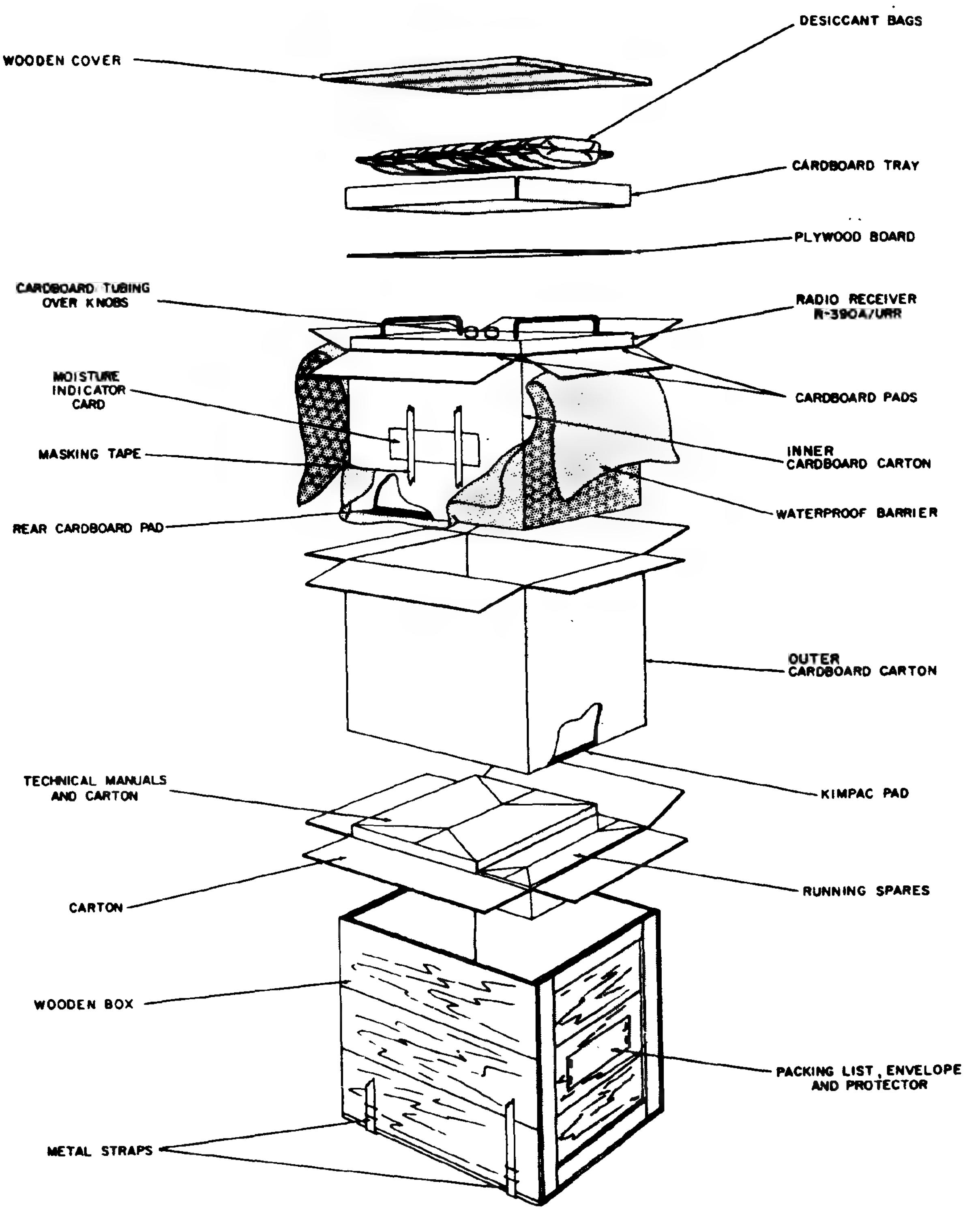

Figure 8-1. Packaging

Figure 8-1 - Packaging

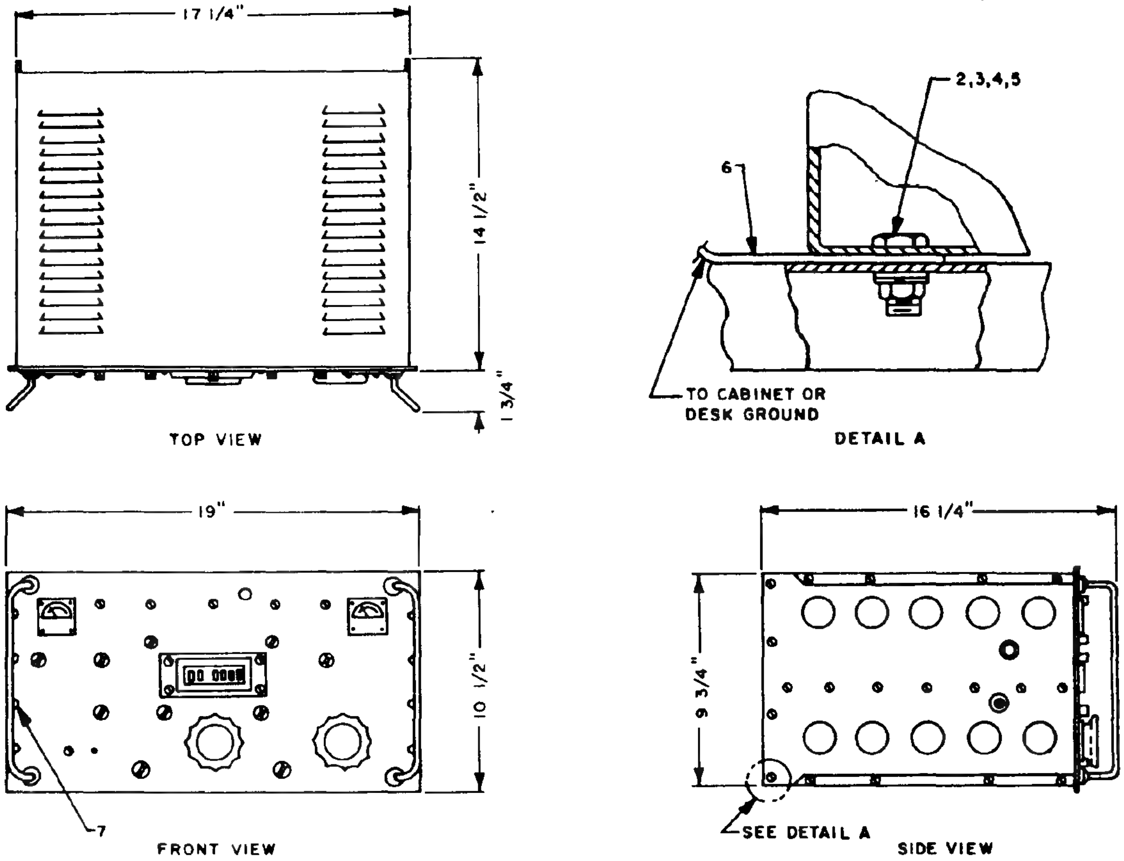

ITEM NUMBER	QUANTITY GF	QUANTITY CF	NOMENCLATURE	PART TYPE OR MODEL NUMBER	MANUFACTURE OR FED SUPPLY CODE	REMARKS
1	1		RADIO RECEIVER	R-390A/URR	F5820-538-7555	
2		4	BOLT, MACH 5/16" -18 X 1-1/2" HEX HD		65308-227-0670	(SEE NOTE 2)
3		4	NUT, HEX, 5/16"-18		65310-271-4612	"
4		8	WASHER, FLAT 5/16"		65310-276-2716	"
5		4	WASHER, SPLIT 5/16"		65310-261-7415	"
6		4	STRAP, COPPER 1/16" X 1"			"
7		8	SCREW #10 - 32 X 5/16" BHMS			FOR RACK MTG.
8			COAXIAL PLUGS AND CONNECTORS			(SEE NOTE 1)

NOTES
1. ALL COAXIAL PLUGS AND CABLES FURNISHED BY INSTALLATION ACTIVITY. REFER TO FIGURE 8-3 FOR PLUG AND CABLE TYPES.
2. ITEMS 2 THROUGH 8 TO BE FURNISHED BY INSTALLATION ACTIVITY.

Figure 8-2. Outline and Dimensions

Figure 8-2 - Outline and Dimensions

8.3 MATERIAL REQUIRED FOR INSTALLATION

1. Hand Tools - as required
2. Antenna patch cable
3. 600-ohm speaker and connecting cable
4. Balanced 600-ohm audio line to auxiliary equipment - as desired.
5. Coaxial Cable, RG-58C/U - if receiver is to be connected to converter.
6. #10-32 x 5/8 inch screws (8 each) - if receiver is rack mounted or installed in CY-4516A/S cabinet.

8.4 INPUT REQUIREMENTS

⇒ Caution:	The power transformer can be damaged if 230 volts is applied to it when it is connected to operate on 115 volts.

8.4.1 The receiver will operate from either 115 or 230 volts ac, 50/60 Hz. To check to see that the TB801 is connected for the correct ac voltage, connect the receiver to a 115-volt ac line, turn the receiver on, and proceed as follows:

1. If the pilot lamps light at full brilliance, the receiver is connected for 115-volt operation.
2. If the pilot lamps light at half brilliance, the receiver is connected for 230-volt operation.
3. If the pilot lamps light at full brilliance and the receiver is to be used on 230 volts, disconnect the receiver and remove the power supply subchassis from it (paragraph 6.3. 13. 1). Connect T801 for 230-volt operation (figure 8-3).

⇒ WARNING:	The voltages used in this receiver are high enough to endanger human life. To prevent shock hazard to personnel touching outside metal parts of the receiver, connect GND terminal 16 on the rear panel to the same ground as that of the power source. Do not depend on the front panel screws or the antenna transmission line to ground the chassis.

8.5 INSTALLATION PROCEDURES

8.5.1 The receiver is shipped as a complete unit. No assembly of units is required.

8.5.2 The receiver may be installed by one man, requiring approximately two hours to complete the installation. Slide the receiver into the rack or cabinet previously designated. Insert the eight #10-32 x 5/8 inch screws into cabinet or rack holes matching the cutouts on receiver face plate.

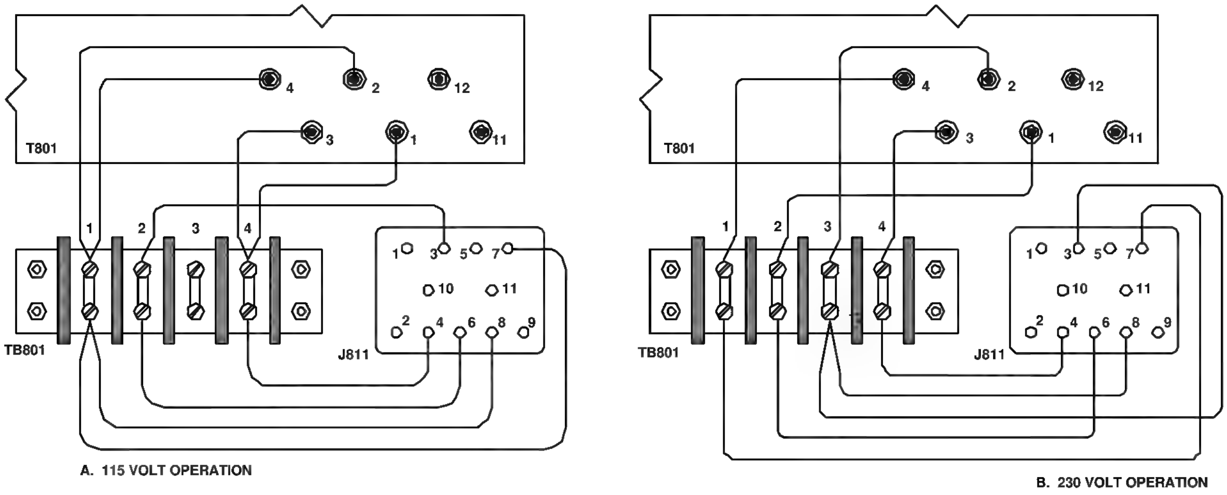

Figure 8-3 - Connections for 115-Volt or 230-Volt Operation[1]

8.5.3 Fabricate coaxial fitting to ends of cables using Electronics Information and Maintenance Book, Installation Standards, NAVSHIPS 0967-000-0110, Section 3 as reference. After completion of cable connection fabrication, measure from shield to center conductor with a multimeter set on R x 1000 scale. Reading obtained should be infinity. Any reading less than 500K ohms should be investigated for improper fabrication of coaxial fitting.

8.5.4 Connecting Procedure. Each receiver is shipped with jumpers on Terminal Boards 102 and 103 connected between terminals 1 and 2, 3 and 4, 11 and 12, and 14 and 15. These four jumpers are required for normal operation.

8.5.4.1 For connecting 50 to 200-ohm balanced antennas, such as a balanced doublet to the BALANCED ANTENNA connector, use Radio Frequency Cable RG-22 with Connector Plug UG-421/U, or use Radio Frequency Cable RG-86/U with Connector Plug 969/U.

8.5.4.2 For adapting unbalanced coaxial leadin to the BALANCED ANTENNA connector, use Adapter Connector UG-971/U with leadin terminated in Connector Plug 573/U whenever possible; if these are not available, use Adapter Connector UG-970/U with leadin terminated in Connector Plug PL-259.

[1] Courtesy of Pete Wokoun, KH6GRT

8.5.4.3 For connecting a whip antenna or a random length single-wire antenna to the UNBALANCED ANTENNA connector, use Connector Plug UG-943B/U. Make the antenna lead-in (figure 8-4) as short as possible.

8.5.4.4 Perform step 1, 2, or 3 below, depending on the type of listening device used.

1. Plug the headset into the PHONES jack.
2. Connect the headset terminals to PHNS terminal 8 and terminal 7 (ground) on TB 102.
3. Connect the loudspeaker terminals to LOCAL AUDIO terminals 6 and 7 on TB 102.

8.5.4.5 For balanced line operation, connect the balanced line to LINE AUDIO terminals 10 and 13 on TB 103. If a balancing bridge is to be used for long-distance applications, perform steps 1 and 2 below.

1. Remove the jumper from terminals 11 and 12 on TB 103.
2. Connect the balancing bridge between terminals 11 and 12 on TB 103.

8.5.4.6 If a transmitter is being used with the receiver for break-in operation, connect the control lines from the transmitter to BRK IN terminal 9 and GND terminal 16 on TB 103.

8.5.4.7 For external gain control, remove the jumper from RF GAIN terminals 1 and 2 on TB 102 and connect an external 5, 000-ohm potentiometer to RF GAIN terminal 1 and terminal 7 (ground).

8.5.4.8 To use an external diode load, remove the jumper from DIODE LOAD terminals 12 and 15 on TB 103 and connect the lines from the external diode load to terminals 14 and 15.

8.5.4.9 For external automatic gain control (AGC), remove the jumper from AGC NOR terminals 3 and 4 on TB 102 and connect the negative terminal of the external AGC source to terminal 4, and the positive terminal of the AGC source to terminal 7 (ground).

8.5.4.10 For frequency-shift converters that require an intermediate frequency (IF) output in a teletypewriter system, connect the coaxial transmission cable terminated in Radio Frequency Plug UG-88 to if OUTPUT jack.

8.5.5 <u>Lubrication Procedure</u>. The only parts of the receiver that require lubrication are the mechanical tuning system, which includes the radio-frequency (RF) gear train assembly and cam racks, and the BFO PITCH control shaft bearing. The receiver is lubricated at the factory and should be lubricated every 6 months thereafter. If inspection indicates the need for more frequent lubrication, shorten the interval accordingly. Overlubrication may cause trouble

and should be avoided.

8.5.5.1 Lubrication Inspection. Check the condition of the mechanical tuning system every time the receiver is withdrawn from its cabinet or case. Proceed as follows:

1. Turn the MEGACYCLE CHANGE and the KILOCYCLE CHANGE controls throughout their ranges; observe the operation of all gears, cams, shafts, bearings, and guide slots.
2. Look for grit, sand, and dust in the moving parts.
3. Check the operation of the BFO PITCH control. If it does not operate freely, check the lubrication of the control shaft bearing.

⇒ **Caution:**	Do not attempt to lubricate the sealed tuning unit of the variable frequency oscillator (VFO) sub- chassis; unstable operation may result.

4. Use a suitable brush dipped in cleaning compound to remove any dirt, grit, sand, grease, and oil from the gears, cams, guide slots, shafts, and bearings.
5. Rotate the MEGACYCLE CHANGE and the KILOCYCLE CHANGE controls so that all parts of the mechanical tuning system can be reached.
6. Thoroughly dry all parts with a clean lint-free cloth before lubrication.

⇒ **Caution:**	Remove excess cleaning compound from the brush so that none is dropped on wires and cables.

8.5.5.2 Detailed Lubrication Instructions. Lubricate the gears, cams, bearings, slug racks, and guide slots.

⇒ **Caution:**	Do not attempt to lubricate the sealed tuning unit of the variable frequency oscillator (VFO) subchassis; unstable operation may result.

1. Dip a short length of bare wire into lubricating oil, MIL-L-7870 and touch the end of the wire to the bearing. One or two drops of oil per bearing is sufficient.
2. Put a small amount of grease, MIL-G-7421 on the gear teeth, the cam edges, and the guide slots.
3. Turn the MEGACYCLE CHANGE and KILOCYCLE CHANGE controls during lubrication to spread the lubricant to all gear teeth and wearing surfaces.

8.6 INSTALLATION CHECKOUT

8.6.1 When it has been determined that the receiver is connected to the correct power source (paragraph 8.4.1) and that all external connections have been made correctly (figure 8-3), refer to paragraph 2. 4 for initial turn-on and installation verification.

8.6.2 Conduct Scheduled Maintenance Procedures given in paragraph 4.3 through 4.3.3 in order to insure the receiver is operating at peak performance.

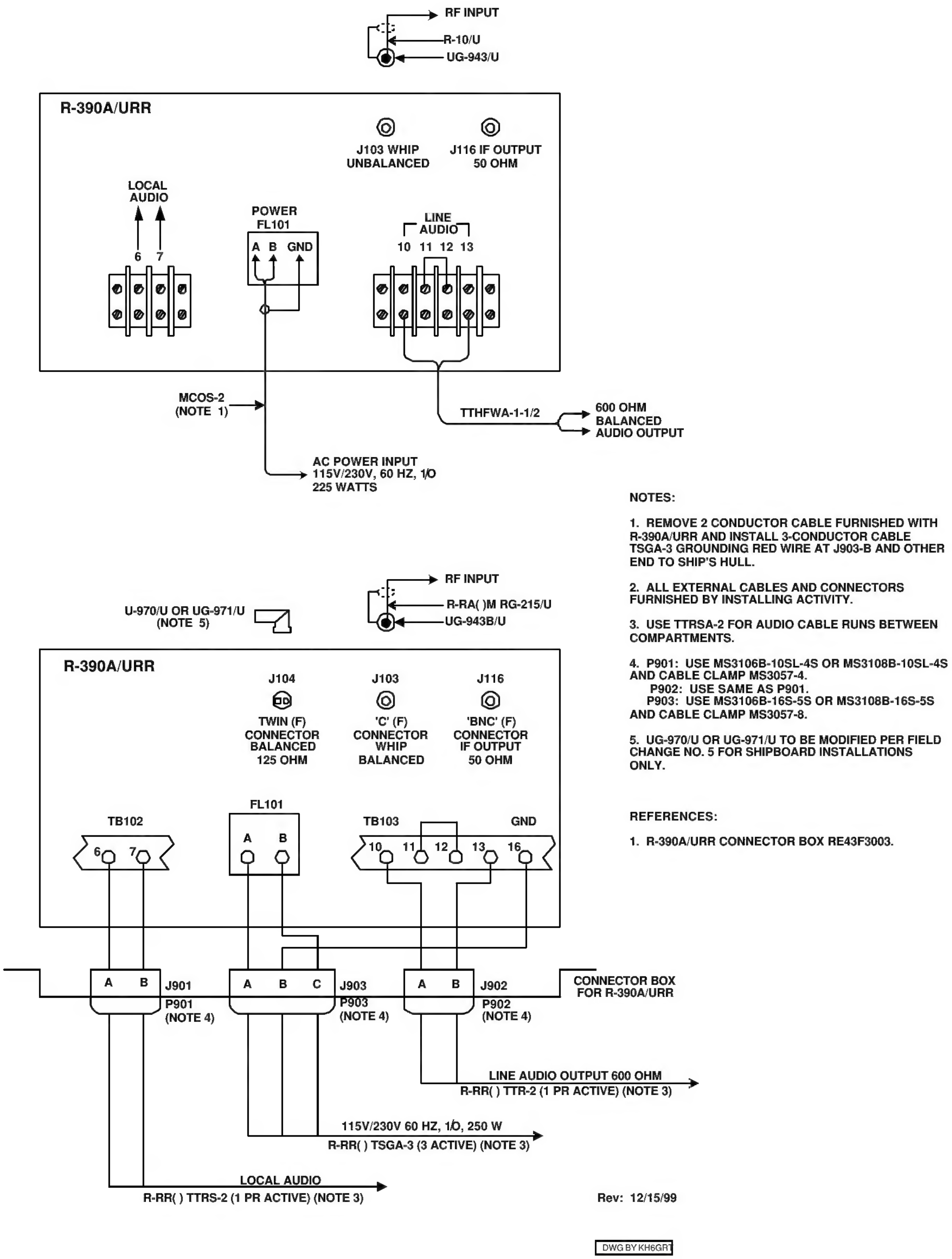

Figure 8-4 - Interconnecting Cabling[2]

[2] Courtesy of Pete Wokoun, KH6GRT